REV.	CNN	CNN DESCRIPTION	Date	Check in
02	-	NEW BORDER	20/01/2010	Shaun Barron

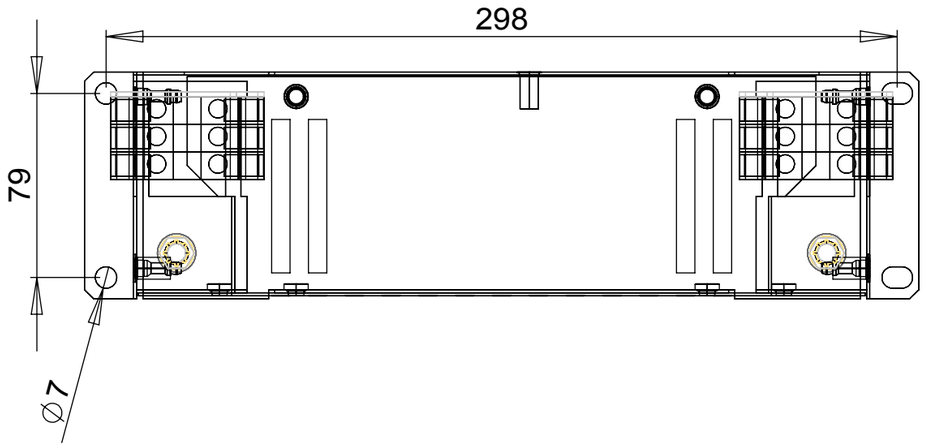

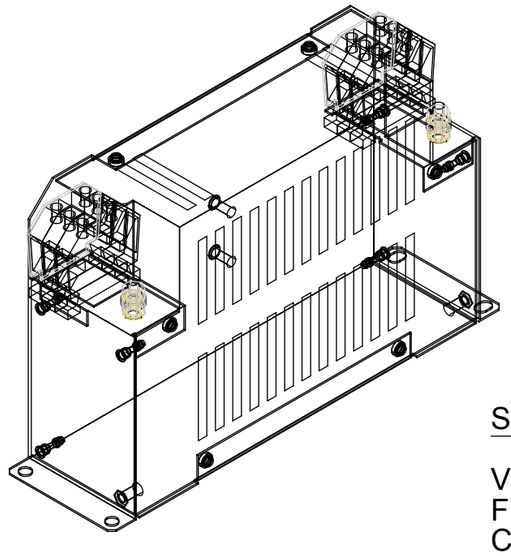

SPECIFICATIONS

VOLTAGE 500Vac
FREQUENCY 50/60Hz
CURRENT 70A @ 40°C
TEMPERATURE -25 TO 100°C
LEAKAGE CURRENT 90mA @ 500V 50Hz
HUMIDITY 90% RH (NON-CONDENSING)
VIBRATION 10-200Hz 1.8G
ELECTRIC STRENGTH 2500Vac/1min.
POWER DISSIPATION 19W
MASS 4.1kg
TERMINALS 50sqmm TERMINAL BLOCK
EARTH TERMINALS M8 STUD
FLANGE MOUNTING 4x M6

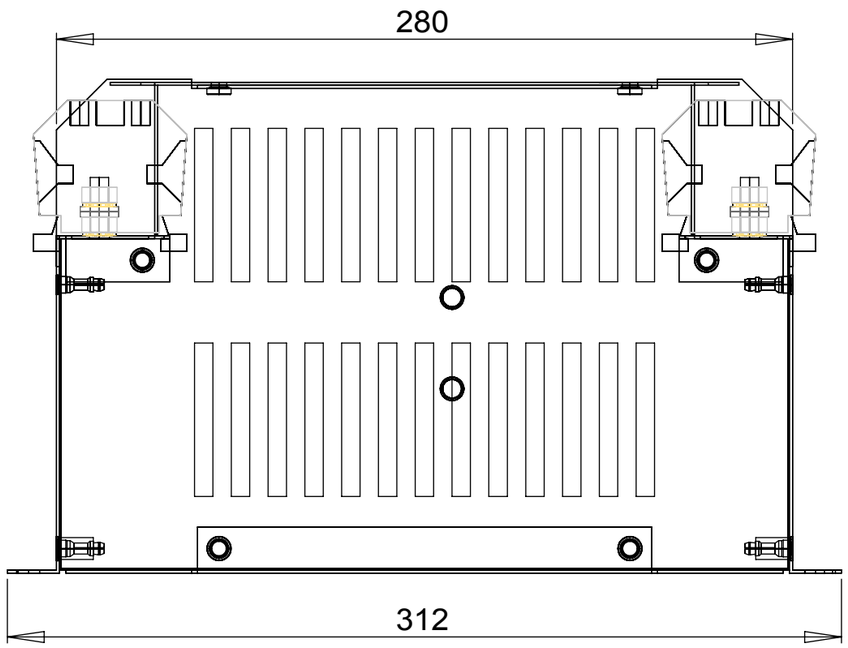

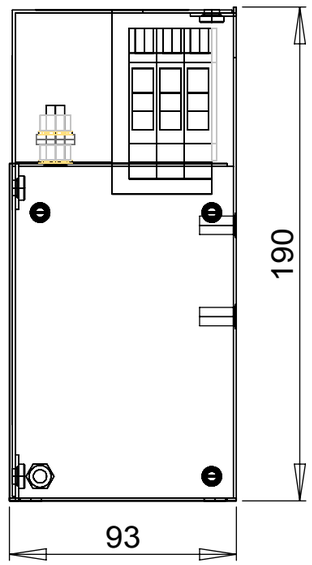

RoHS 2002/95/EC Compliant

Alpha3 manufacturing | ROXBURGH EMC | DELTRON Components | DELTRON Enclosures | DEM | b·e·s Media

PROPRIETARY AND CONFIDENTIAL
THE INFORMATION CONTAINED IN THIS DRAWING IS THE SOLE PROPERTY OF **ALPHA 3 MANUFACTURING**. ANY REPRODUCTION IN PART OR AS A WHOLE WITHOUT THE WRITTEN PERMISSION OF **ALPHA 3 MANUFACTURING** IS PROHIBITED.

DEM Manufacturing, Deltron Emcon House
Hargreaves Way, Sawcliffe Ind. Park,
Scunthorpe, North Lincolnshire, DN15 8RF, UK

UNLESS OTHERWISE SPECIFIED:
DIMENSIONS ARE IN MILLIMETRES
LINEAR TOLERANCE:
NO DECIMAL PLACES ±0.5mm
1 DECIMAL PLACE ±0.25mm
2 DECIMAL PLACES ±0.125mm
ANGULAR TOLERANCE: ±1°

FINISH - - -
DEBURR AND BREAK SHARP EDGES
IF IN DOUBT ASK DO NOT SCALE DRAWING
MATERIAL -

DRAWN BY NL
APPROVED BY NL
THIRD ANGLE PROJECTION
SHEET 1 OF 1
SCALE 1:1
A3

TITLE GENERAL SPECIFICATION 3 PHASE 70A 500V INDUSTRIAL FILTER
DRAWING NO. KMF370
ISSUE 02
Release