REV.	CNN	CNN DESCRIPTION	Date	Check in
02	-	Rohs missing	19/01/2010	Shaun Barron
02	-	BORDER CHANGE	20/01/2010	Shaun Barron

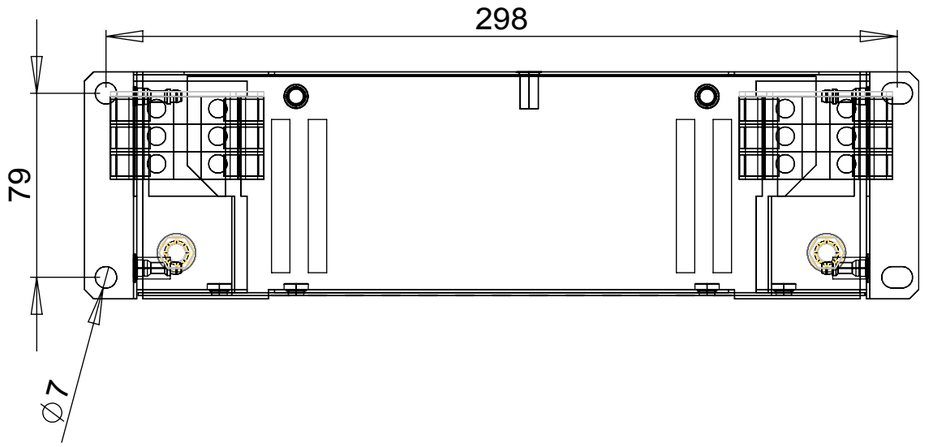

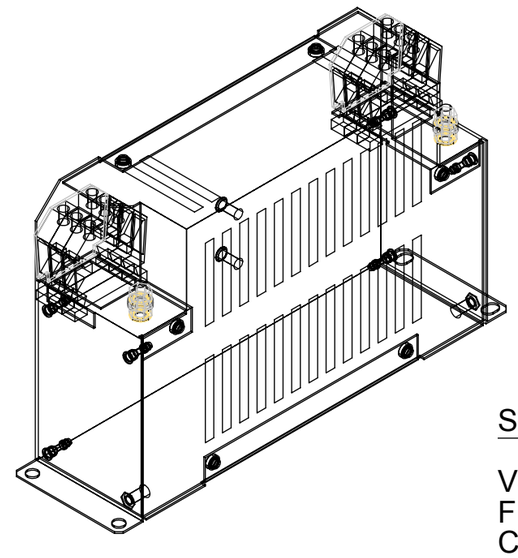

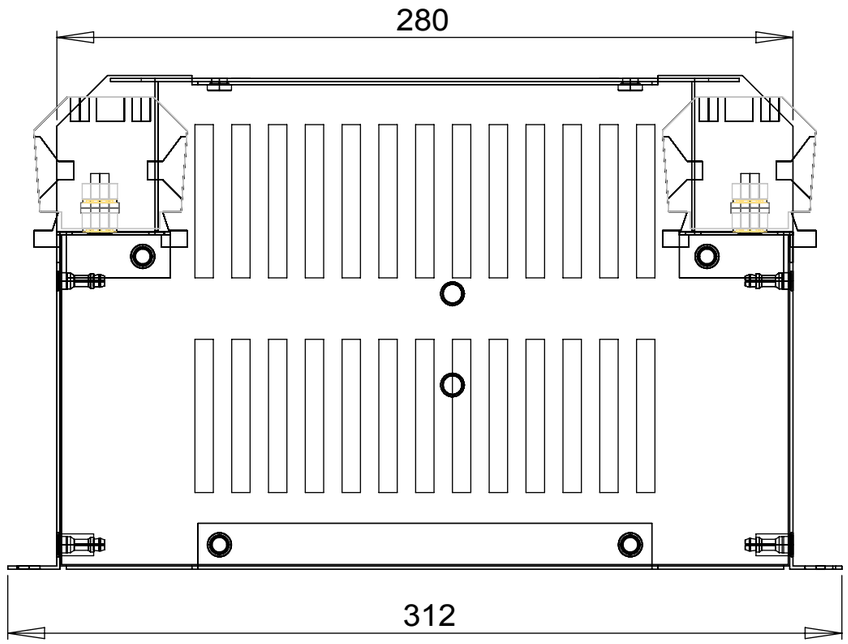

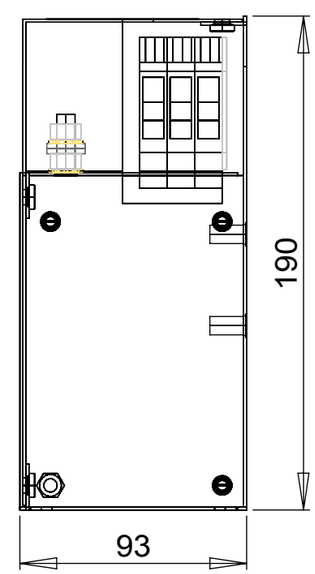

SPECIFICATIONS

VOLTAGE 600Vac
FREQUENCY 50/60Hz
CURRENT 50A @ 40°C
TEMPERATURE -25 TO 100°C
LEAKAGE CURRENT 178mA @ 600V 50Hz
HUMIDITY 90% RH (NON-CONDENSING)
VIBRATION 10-200Hz 1.8G
ELECTRIC STRENGTH 3150Vdc/1min.
POWER DISSIPATION 16W
MASS 3.7kg
TERMINALS 50sqmm TERMINAL BLOCK
EARTH TERMINALS M8 STUD
FLANGE MOUNTING 4x M6

RoHS 2002/95/EC Compliant

Tel No.+44(0)1724273200 Website www.dem-uk.com

PROPRIETARY AND CONFIDENTIAL
THE INFORMATION CONTAINED IN THIS DRAWING IS THE SOLE PROPERTY OF **ALPHA 3 MANUFACTURING**. ANY REPRODUCTION IN PART OR AS A WHOLE WITHOUT THE WRITTEN PERMISSION OF **ALPHA 3 MANUFACTURING** IS PROHIBITED.

DEM Manufacturing, Deltron Emcon House
Hargreaves Way, Sawcliffe Ind. Park,
Scunthorpe, North Lincolnshire, DN15 8RF, UK

UNLESS OTHERWISE SPECIFIED:
DIMENSIONS ARE IN MILLIMETRES
LINEAR TOLERANCE:
NO DECIMAL PLACES ±0.5mm
1 DECIMAL PLACE ±0.25mm
2 DECIMAL PLACES ±0.125mm
ANGULAR TOLERANCE: ±1°

FINISH -
-
-
DEBURR AND BREAK SHARP EDGES
IF IN DOUBT ASK
DO NOT SCALE DRAWING
MATERIAL -

DRAWN BY AT
APPROVED BY SW
THIRD ANGLE PROJECTION
SHEET 1 OF 1
SCALE 1:1
A3

TITLE GENERAL SPECIFICATION 3 PHASE 50A 600V INDUSTRIAL FILTER
DRAWING NO. KMF350V
ISSUE 02
Release