MS27471
Solder Mount Hermetic Receptacle
MIL-DTL-38999 Series I

How To Order: *MS*

Shell Style
MS27471 - *Solder Mount, Series I*

Connector Material / Finish
D - Carbon Steel - Fused Tin Finish
E - Stainless Steel - Passivate Finish
N - Stainless Steel - Nickel Finish

Contact Termination
P - Pin, Solder Cup
X - Pin, Eyelet
C - Pin, PCB Flex Feedthrough
S - Socket, Solder Cup
Z - Socket, Eyelet
D - Socket, PCB Flex Feedthrough

MS27471 Y 11 N 35 P A

Class
Y- Hermetic

Shell Size
9,11,13,15,17,19,21,23,25

Insert Arrangement
MIL-DTL-38999 Series I Hermetic Inserts Per MIL-STD-1560; See Pages B-2 - B-4

Alternate Key Position
A, B, C, D
(Omit for Normal)

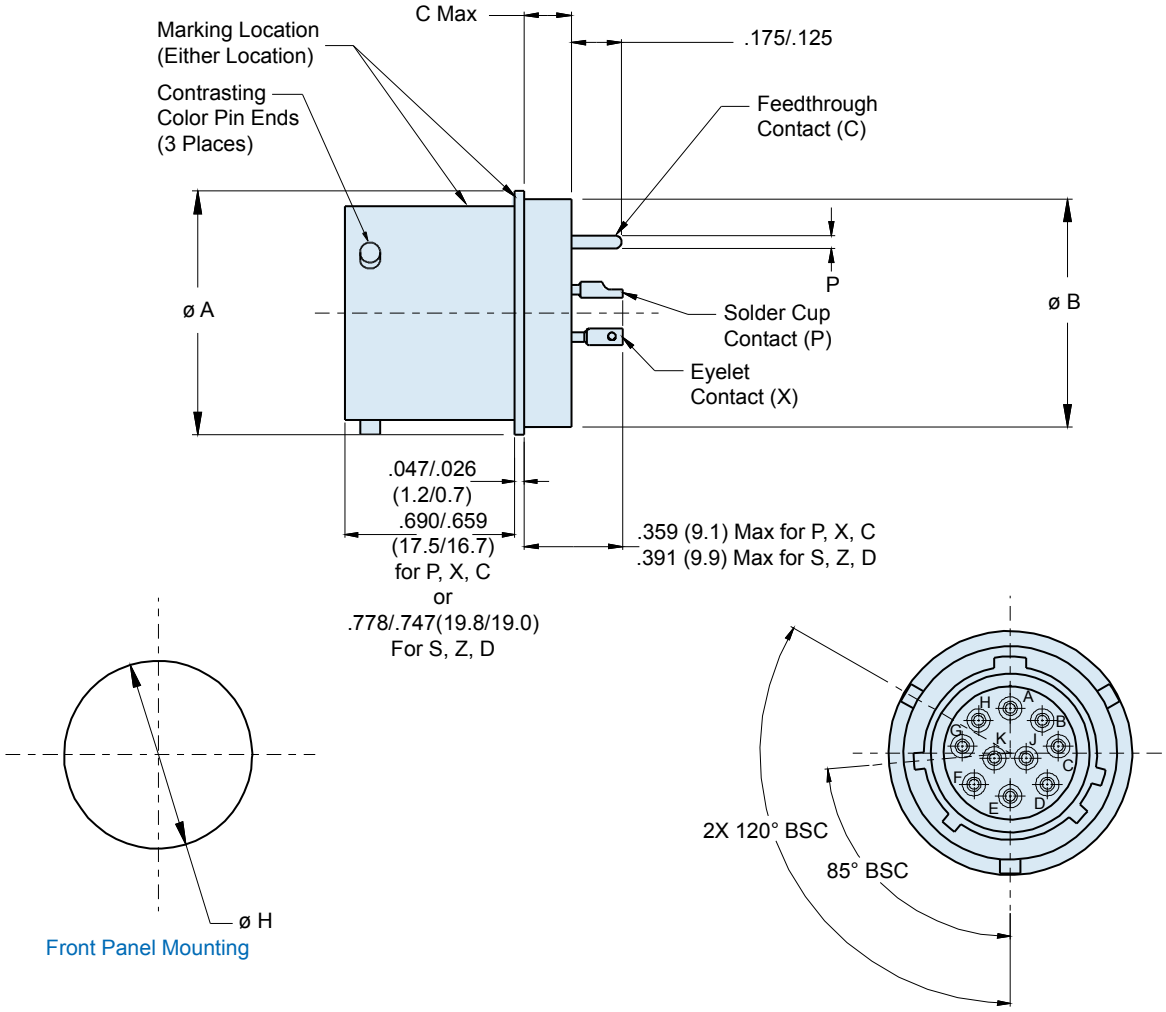

Dimensions in Inches (millimeters) are subject to change without notice.

© 2013 Glenair, Inc.