MS27478
Solder Mount Hermetic Receptacle
MIL-DTL-38999 Series II

How To Order: *MS*

Shell Style
MS27478 - Solder Mount, Series II

Connector Material / Finish
D - Carbon Steel - Fused Tin Finish
E - Stainless Steel - Passivate Finish
N - Stainless Steel - Nickel Finish

Contact Termination
P - Pin, Solder Cup
X - Pin, Eyelet
C - Pin, PCB Flex Feedthrough
S - Socket, Solder Cup
Z - Socket, Eyelet
D - Socket, PCB Flex Feedthrough

MS27478 Y 10 N 35 P A

Class
Y- Hermetic

Shell Size
8,10,12,14,16,18,20,22,24

Insert Arrangement
MIL-DTL-38999 Series II Hermetic Inserts Per MIL-STD-1560; See Pages B-2 - B-4

Alternate Key Position
A, B, C, D
(Omit for Normal)

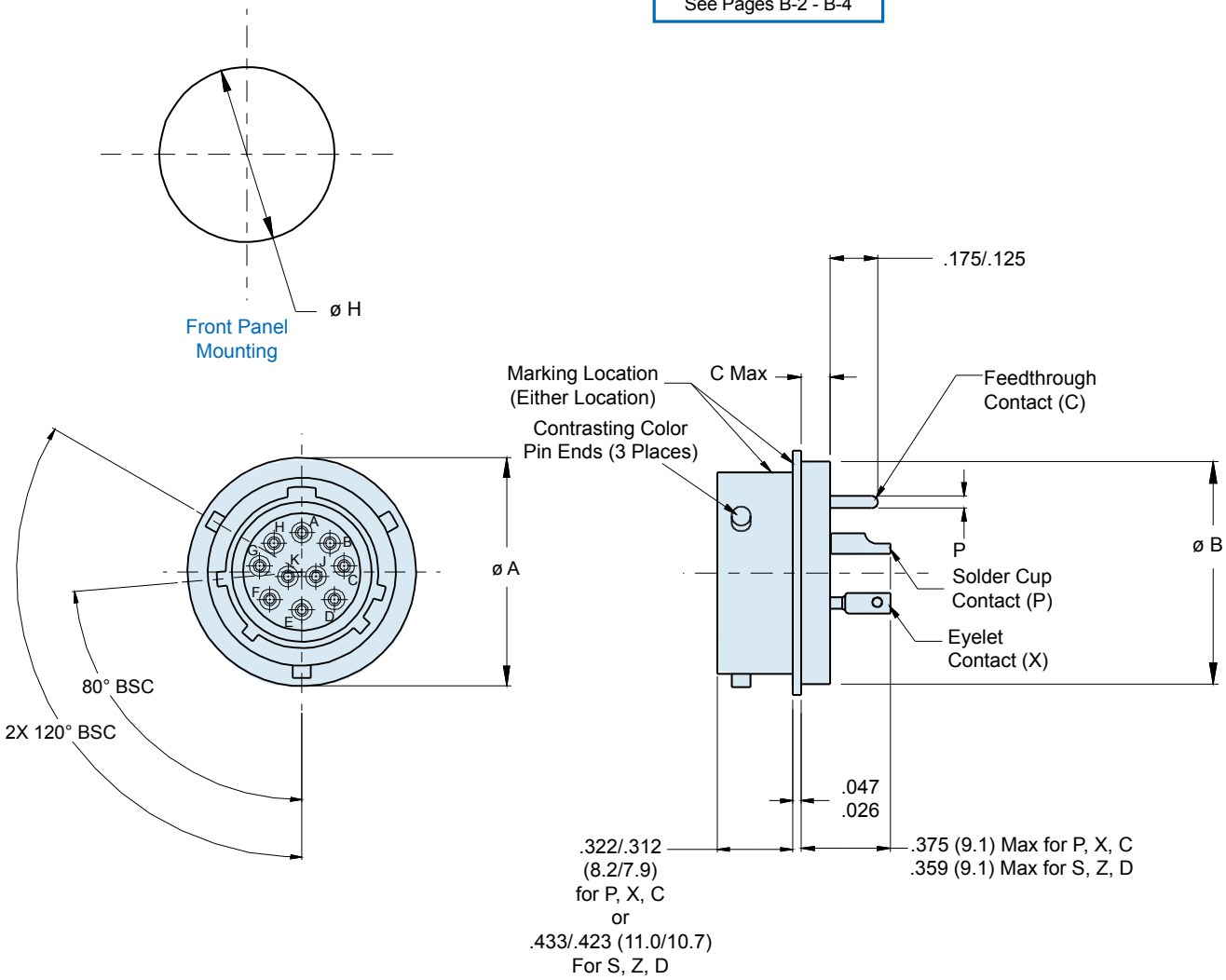

Dimensions in Inches (millimeters) are subject to change without notice.

© 2013 Glenair, Inc. U.S. CAGE Code 06324 Printed in U.S.A.