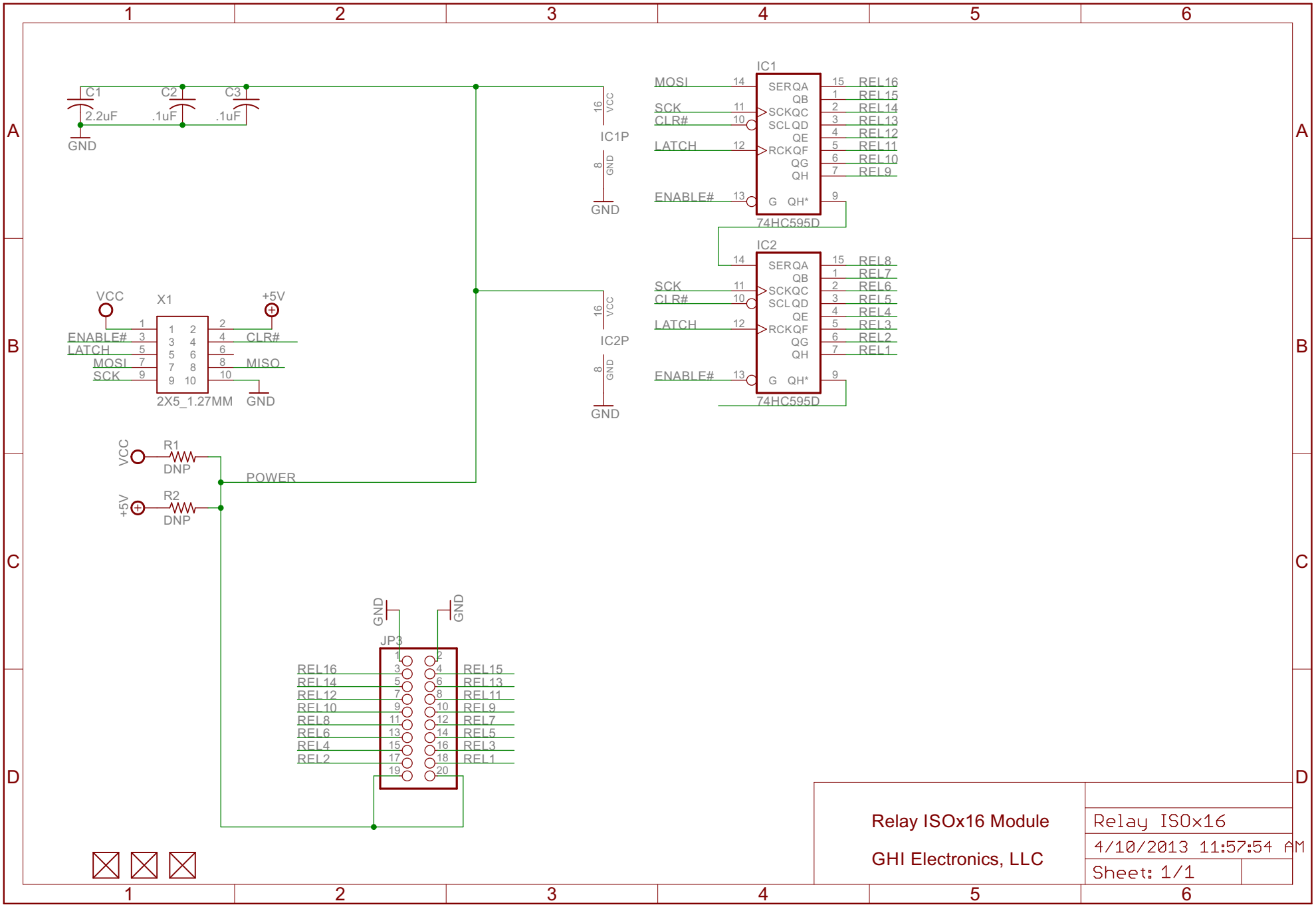
C1
2.2uF
C2
.1uF
C3
.1uF
GND
IC1P
IC2P
VCC
GND
IC1
IC2
74HC595D
SERQA
QB
SCKQC
SCLQD
QE
RCKQF
QG
QH
G
QH*
MOSI
SCK
CLR#
LATCH
ENABLE#
REL16
REL15
REL14
REL13
REL12
REL11
REL10
REL9
REL8
REL7
REL6
REL5
REL4
REL3
REL2
REL1
X1
2X5_1.27MM
+5V
MISO
R1
R2
DNP
POWER
JP3
Relay ISOx16 Module
GHI Electronics, LLC
Relay ISOx16
4/10/2013 11:57:54 AM
Sheet: 1/1