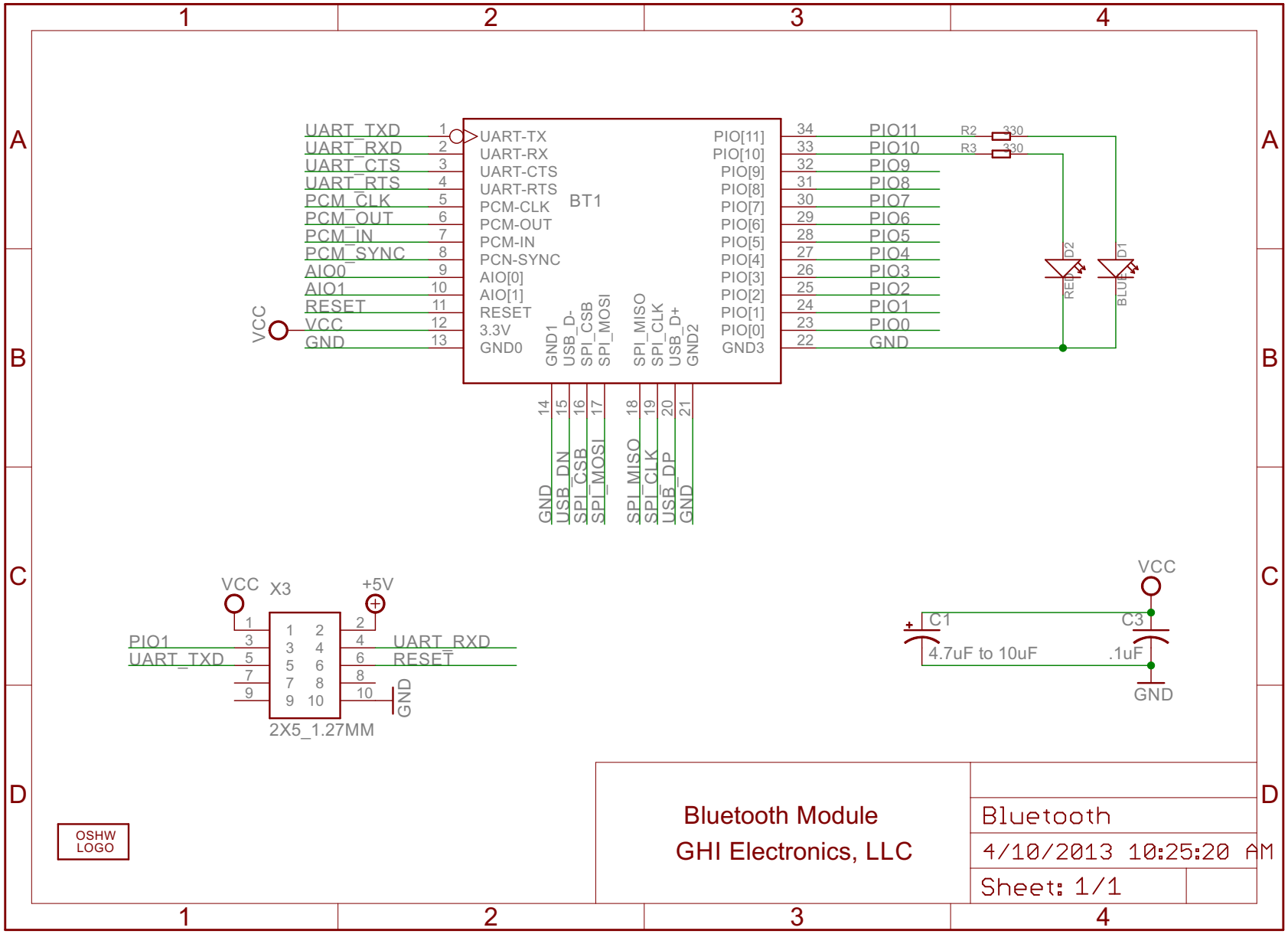
BT1
UART_TXD 1 UART-TX
UART_RXD 2 UART-RX
UART_CTS 3 UART-CTS
UART_RTS 4 UART-RTS
PCM_CLK 5 PCM-CLK
PCM_OUT 6 PCM-OUT
PCM_IN 7 PCM-IN
PCM_SYNC 8 PCN-SYNC
AIO0 9 AIO[0]
AIO1 10 AIO[1]
RESET 11 RESET
VCC 12 3.3V
GND 13 GND0
VCC
14 GND1 GND
15 USB_D- USB_DN
16 SPI_CSB SPI_CSB
17 SPI_MOSI SPI_MOSI
18 SPI_MISO SPI_MISO
19 SPI_CLK SPI_CLK
20 USB_D+ USB_DP
21 GND2 GND
PIO[11] 34 PIO11
PIO[10] 33 PIO10
PIO[9] 32 PIO9
PIO[8] 31 PIO8
PIO[7] 30 PIO7
PIO[6] 29 PIO6
PIO[5] 28 PIO5
PIO[4] 27 PIO4
PIO[3] 26 PIO3
PIO[2] 25 PIO2
PIO[1] 24 PIO1
PIO[0] 23 PIO0
GND3 22 GND
R2 330
R3 330
D2 RED
D1 BLUE
VCC X3 +5V
PIO1 3
UART_TXD 5
7
9
1 2 3 4 5 6 7 8 9 10
2 UART_RXD 4
RESET 6
8
10 GND
2X5_1.27MM
VCC
C1 4.7uF to 10uF
C3 .1uF
GND
OSHW LOGO
Bluetooth Module
GHI Electronics, LLC
Bluetooth
4/10/2013 10:25:20 AM
Sheet: 1/1