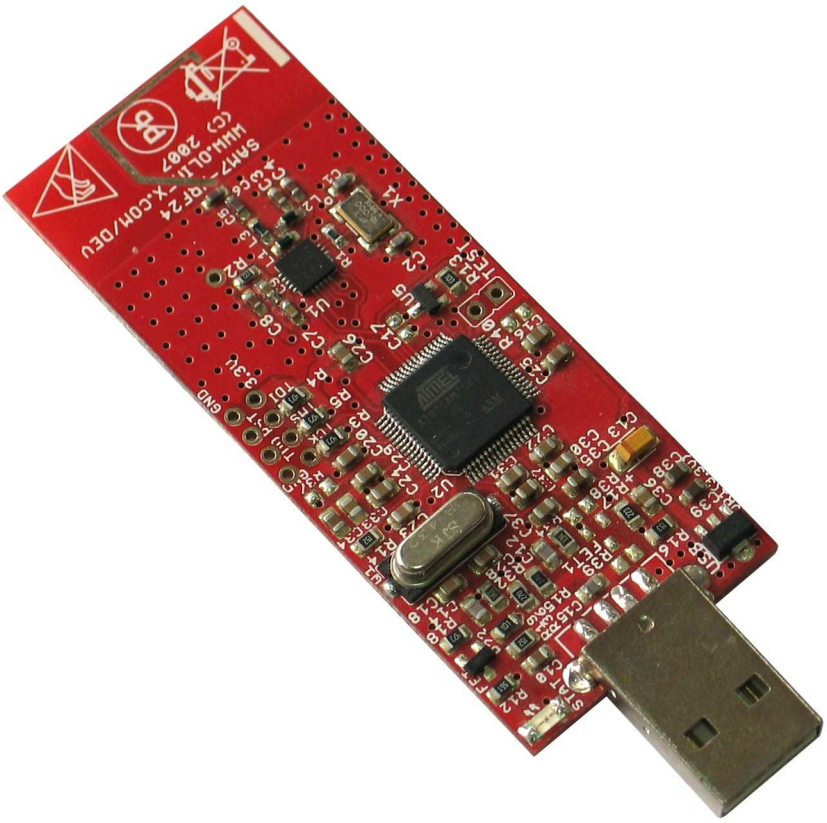

SAM7-NRF24 development board

Users Manual

Pb-free, Green All boards produced by Olimex are ROHS compliant

Rev. Initial, April 2011

Copyright(c) 2011, OLIMEX Ltd, All rights reserved

INTRODUCTION:

SAM7-NRF24 is low cost board with AT91SAM7S64 and 2.4Ghz NRF24L01 transceiver, it allow easy communication between PC with other boards which have nRF24L01 chips on them as MOD-NRF24Lx, or STM32-103STK.

BOARD FEATURES:

- MCU: AT91SAM7S64 16/32 bit ARM7TDMI™ with 64K Bytes Program Flash, 16K Bytes RAM, USB 2.0, RTT, 10 bit ADC 384 ksps, 2x UARTs, TWI (I2C), SPI, 3x 32bit TIMERS, 4x PWM, SSC, WDT, PDC (DMA) for all peripherals, up to 60MHz operation
- Nordic nRF24L01
- on board voltage regulator 3.3V with up to 250 mA current
- power supply filtering capacitor
- 18.432 Mhz crystal
- Power-on led
- on-board antenna
- PCB: FR-4, 1.5 mm (0,062"), soldermask, silkscreen component print
- Dimensions: 73.66 x 29.46 mm (2.90 x 1.16")

ELECTROSTATIC WARNING:

The SAM7-NRF24 board is shipped in protective anti-static packaging. The board must not be subject to high electrostatic potentials. General practice for working with static sensitive devices should be applied when working with this board.

BOARD USE REQUIREMENTS:

Cables: The cable you will need depends on the programmer/debugger you use. If you use ARM-JTAG, you will need LPT cable, if you use ARM-USB-TINY, ARM-USB-TINY-H, or ARM-JTAG-EW, you will need A-B USB cable, if you use ARM-USB-OCD, or ARM-USB-OCD-H, you will need A-B USB cable and optional null modem cable.

Hardware: Programmer/Debugger – one of our Programmers – ARM-JTAG-EW, ARM-JTAG, ARM-USB-OCD, ARM-USB-TINY, ARM-USB-OCD-H, ARM-USB-TINY-H, or similar to them.

Note: These programmers can not be used with SAM7-NRF24 without an adapter. The signals are terminated at JTAG (not typical) holes.
We don't offer such an adapter, so you have to make it by yourself.
The board can be programmed without programmer via SAM-BA.

PROCESSOR FEATURES:

SAM7-NRF24 board use AT91SAM7S64 - low pincount Flash microcontroller based on the 32-bit ARM7TDMI RISC processor with these features:

- Incorporates the ARM7TDMI® ARM® Thumb® Processor
  - – High-performance 32-bit RISC Architecture
  - – High-density 16-bit Instruction Set
  - – Leader in MIPS/Watt
  - – Embedded ICE In-circuit Emulation, Debug Communication Channel Support
- 64 Kbytes of Internal High-speed Flash, Organized in 512 Pages of 128 Bytes
  - – Single Cycle Access at Up to 30 MHz in Worst Case Conditions, Prefetch Buffer Optimizing Thumb Instruction Execution at Maximum Speed
  - – Page Programming Time: 4 ms, Including Page Auto-erase, Full Erase Time: 10 ms
  - – 10,000 Write Cycles, 10-year Data Retention Capability, Sector Lock Capabilities, Flash Security Bit
  - – Fast Flash Programming Interface for High Volume Production
- 16 Kbytes of Internal High-speed SRAM, Single-cycle Access at Maximum Speed
- Memory Controller (MC)
  - – Embedded Flash Controller, Abort Status and Misalignment Detection
- Reset Controller (RSTC)
  - – Based on Power-on Reset and Low-power Factory-calibrated Brownout Detector
  - – Provides External Reset Signal Shaping and Reset Source Status
- Clock Generator (CKGR)
  - – Low-power RC Oscillator, 3 to 20 MHz On-chip Oscillator and one PLL
- Power Management Controller (PMC)
  - – Software Power Optimization Capabilities, Including Slow Clock Mode (Down to 500 Hz) and Idle Mode
  - – Three Programmable External Clock Signals
- Advanced Interrupt Controller (AIC)
  - – Individually Maskable, Eight-level Priority, Vectored Interrupt Sources
  - – Two External Interrupt Sources and One Fast Interrupt Source, Spurious Interrupt Protected
- Debug Unit (DBGU)
  - – 2-wire UART and Support for Debug Communication Channel interrupt,

    Programmable ICE Access Prevention
- Periodic Interval Timer (PIT)
  - – 20-bit Programmable Counter plus 12-bit Interval Counter

- Windowed Watchdog (WDT)
    - 12-bit key-protected Programmable Counter
    - Provides Reset or Interrupt Signals to the System
    - Counter May Be Stopped While the Processor is in Debug State or in Idle Mode
- Real-time Timer (RTT)
    - 32-bit Free-running Counter with Alarm
    - Runs Off the Internal RC Oscillator
- One Parallel Input/Output Controller (PIOA)
    - Thirty-two Programmable I/O Lines Multiplexed with up to Two Peripheral I/Os
    - Input Change Interrupt Capability on Each I/O Line
    - Individually Programmable Open-drain, Pull-up resistor and Synchronous Output
- Eleven Peripheral DMA Controller (PDC) Channels
- One USB 2.0 Full Speed (12 Mbits per second) Device Port
    - On-chip Transceiver, 328-byte Configurable Integrated FIFOs
- One Synchronous Serial Controller (SSC)
    - Independent Clock and Frame Sync Signals for Each Receiver and Transmitter
    - I²S Analog Interface Support, Time Division Multiplex Support
    - High-speed Continuous Data Stream Capabilities with 32-bit Data Transfer
- Two Universal Synchronous/Asynchronous Receiver Transmitters (USART)
    - Individual Baud Rate Generator, IrDA Infrared Modulation/Demodulation
    - Support for ISO7816 T0/T1 Smart Card, Hardware Handshaking, RS485 Support
    - Full Modem Line Support on USART1
- One Master/Slave Serial Peripheral Interface (SPI)
    - 8- to 16-bit Programmable Data Length, Four External Peripheral Chip Selects
- One Three-channel 16-bit Timer/Counter (TC)
    - Three External Clock Inputs, Two Multi-purpose I/O Pins per Channel
    - Double PWM Generation, Capture/Waveform Mode, Up/Down Capability
- One Four-channel 16-bit PWM Controller (PWMC)
- One Two-wire Interface (TWI)
    - Master Mode Support Only, All Two-wire Atmel EEPROMs Supported

- One 8-channel 10-bit Analog-to-Digital Converter, Four Channels Multiplexed with Digital I/Os
- IEEE 1149.1 JTAG Boundary Scan on All Digital Pins
- 5V-tolerant I/Os, including Four High-current Drive I/O lines, Up to 16 mA Each
- Power Supplies
    - Embedded 1.8V Regulator, Drawing up to 100 mA for the Core and External Components
    - 3.3V VDDIO I/O Lines Power Supply, Independent 3.3V VDDFLASH Flash Power Supply
    - 1.8V VDDCORE Core Power Supply with Brownout Detector
- Fully Static Operation: Up to 55 MHz at 1.65V and 85° C Worst Case Conditions

BLOCK DIAGRAM:

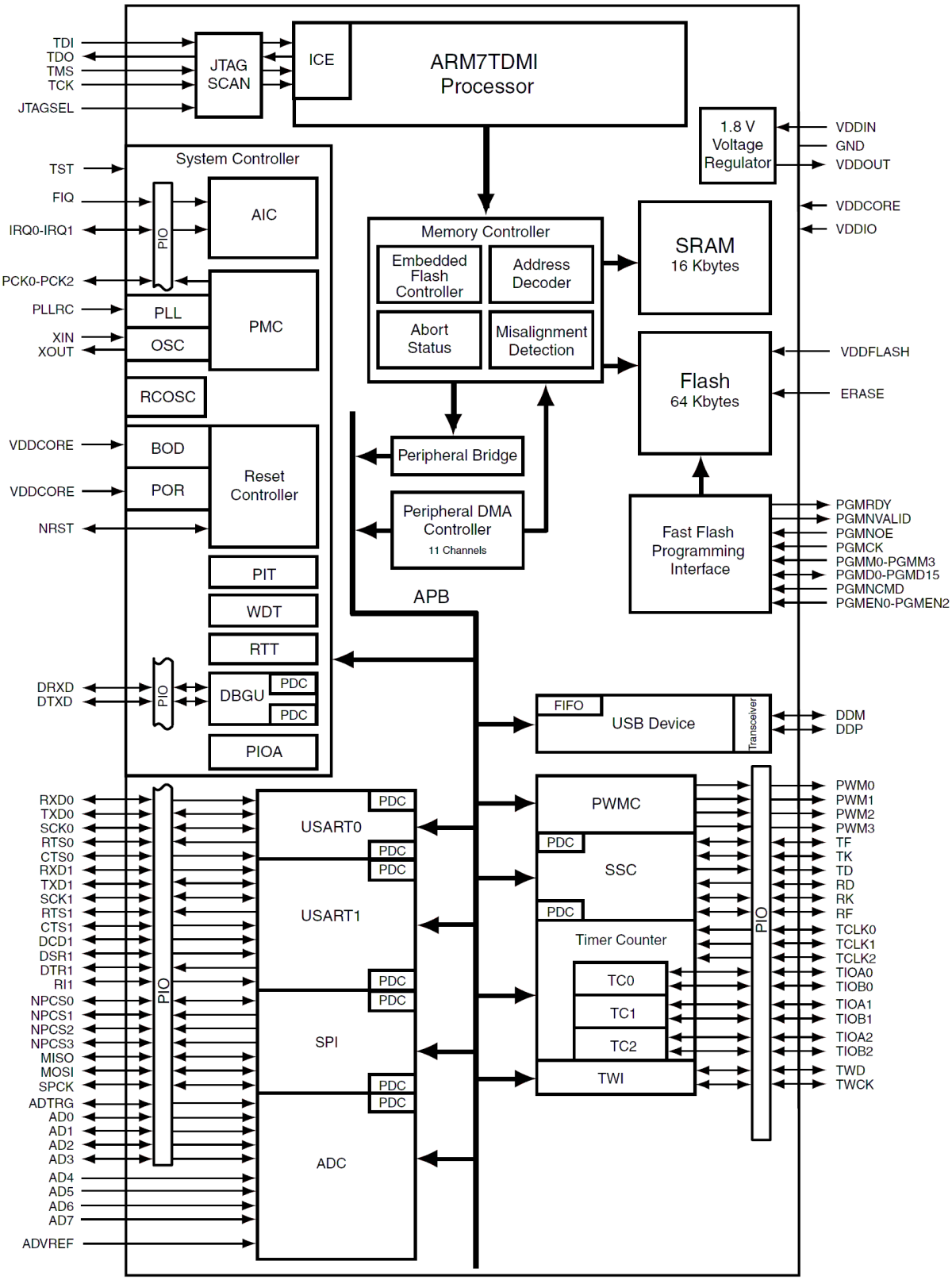

MEMORY MAP:

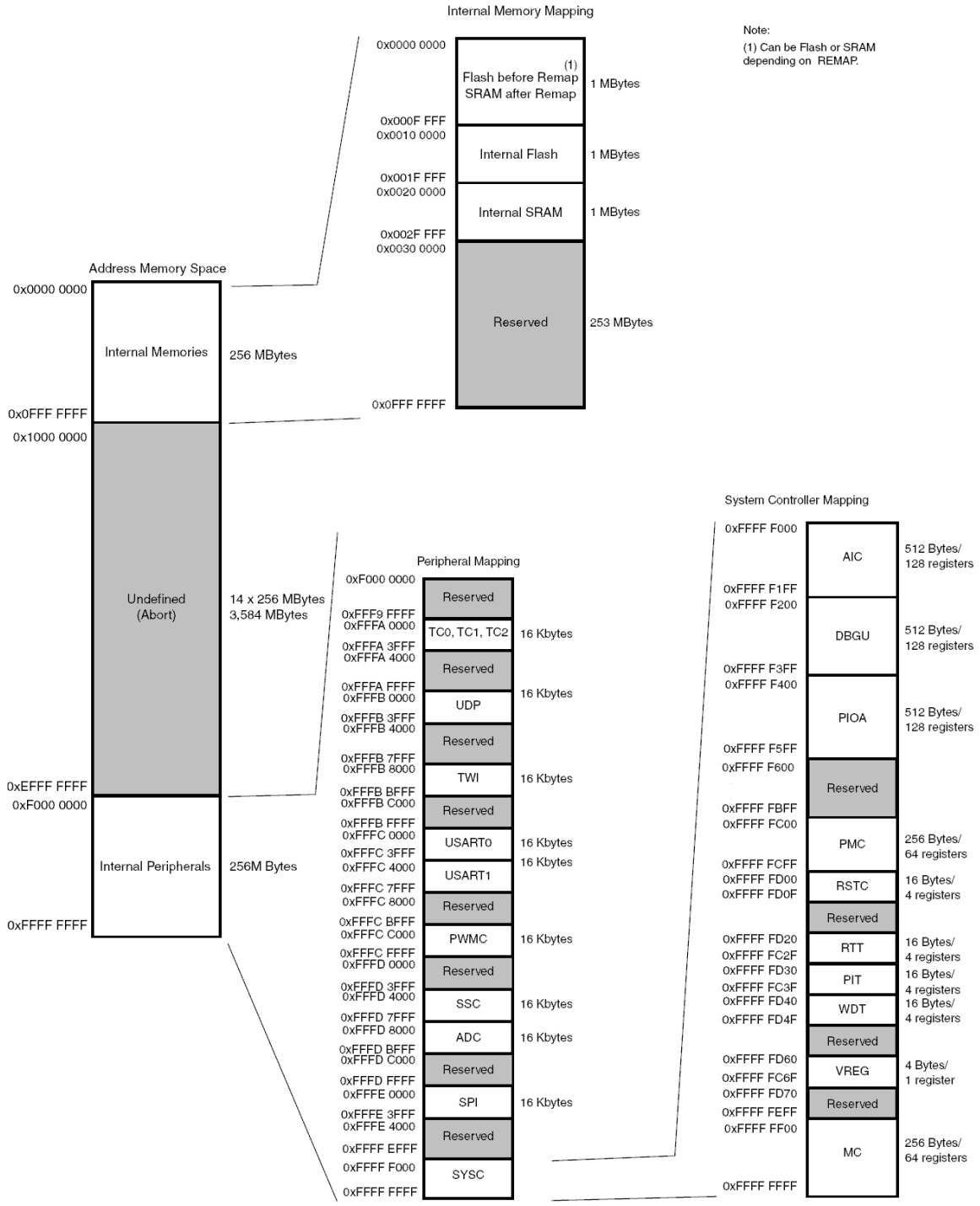
Internal Memory Mapping
Note:
(1) Can be Flash or SRAM depending on REMAP.
0x0000 0000
(1)
Flash before Remap
SRAM after Remap
1 MBytes
0x000F FFF
0x0010 0000
Internal Flash
1 MBytes
0x001F FFF
0x0020 0000
Internal SRAM
1 MBytes
0x002F FFF
0x0030 0000
Reserved
253 MBytes
0x0FFF FFFF
Address Memory Space
0x0000 0000
Internal Memories
256 MBytes
0x0FFF FFFF
0x1000 0000
Undefined
(Abort)
14 x 256 MBytes
3,584 MBytes
0xEFFF FFFF
0xF000 0000
Internal Peripherals
256M Bytes
0xFFFF FFFF
Peripheral Mapping
0xF000 0000
Reserved
0xFFF9 FFFF
0xFFFA 0000
TC0, TC1, TC2
16 Kbytes
0xFFFA 3FFF
0xFFFA 4000
Reserved
0xFFFA FFFF
0xFFFB 0000
UDP
16 Kbytes
0xFFFB 3FFF
0xFFFB 4000
Reserved
0xFFFB 7FFF
0xFFFB 8000
TWI
16 Kbytes
0xFFFB BFFF
0xFFFB C000
Reserved
0xFFFB FFFF
0xFFFC 0000
USART0
16 Kbytes
0xFFFC 3FFF
0xFFFC 4000
USART1
16 Kbytes
0xFFFC 7FFF
0xFFFC 8000
Reserved
0xFFFC BFFF
0xFFFC C000
PWMC
16 Kbytes
0xFFFC FFFF
0xFFFD 0000
Reserved
0xFFFD 3FFF
0xFFFD 4000
SSC
16 Kbytes
0xFFFD 7FFF
0xFFFD 8000
ADC
16 Kbytes
0xFFFD BFFF
0xFFFD C000
Reserved
0xFFFD FFFF
0xFFFE 0000
SPI
16 Kbytes
0xFFFE 3FFF
0xFFFE 4000
Reserved
0xFFFF EFFF
0xFFFF F000
SYSC
0xFFFF FFFF
System Controller Mapping
0xFFFF F000
AIC
512 Bytes/
128 registers
0xFFFF F1FF
0xFFFF F200
DBGU
512 Bytes/
128 registers
0xFFFF F3FF
0xFFFF F400
PIOA
512 Bytes/
128 registers
0xFFFF F5FF
0xFFFF F600
Reserved
0xFFFF FBFF
0xFFFF FC00
PMC
256 Bytes/
64 registers
0xFFFF FCFF
0xFFFF FD00
RSTC
16 Bytes/
4 registers
0xFFFF FD0F
Reserved
0xFFFF FD20
RTT
16 Bytes/
4 registers
0xFFFF FC2F
0xFFFF FD30
PIT
16 Bytes/
4 registers
0xFFFF FC3F
0xFFFF FD40
WDT
16 Bytes/
4 registers
0xFFFF FD4F
Reserved
0xFFFF FD60
VREG
4 Bytes/
1 register
0xFFFF FC6F
0xFFFF FD70
Reserved
0xFFFF FEFF
0xFFFF FF00
MC
256 Bytes/
64 registers
0xFFFF FFFF

SCHEMATIC:

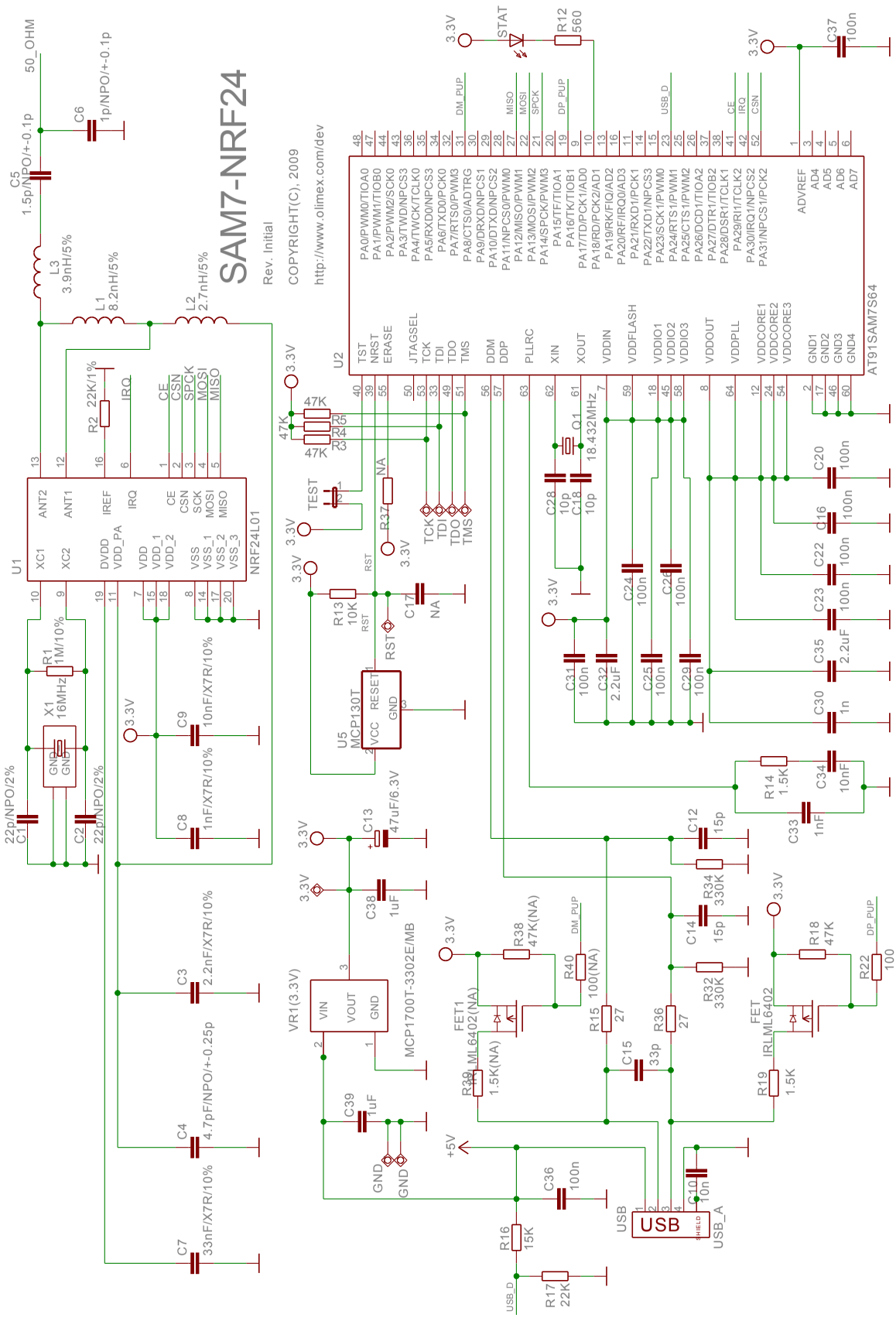
SAM7-NRF24
Rev. Initial
COPYRIGHT(C), 2009
http://www.olimex.com/dev
U1
NRF24L01
U2
AT91SAM7S64
U5
MCP130T
VR1(3.3V)
MCP1700T-3302E/MB
FET1
ML6402(NA)
FET
IRLML6402
USB
USB_A
X1
16MHz
Q1
18.432MHz
50_OHM
STAT
TEST
+5V
3.3V

BOARD LAYOUT:

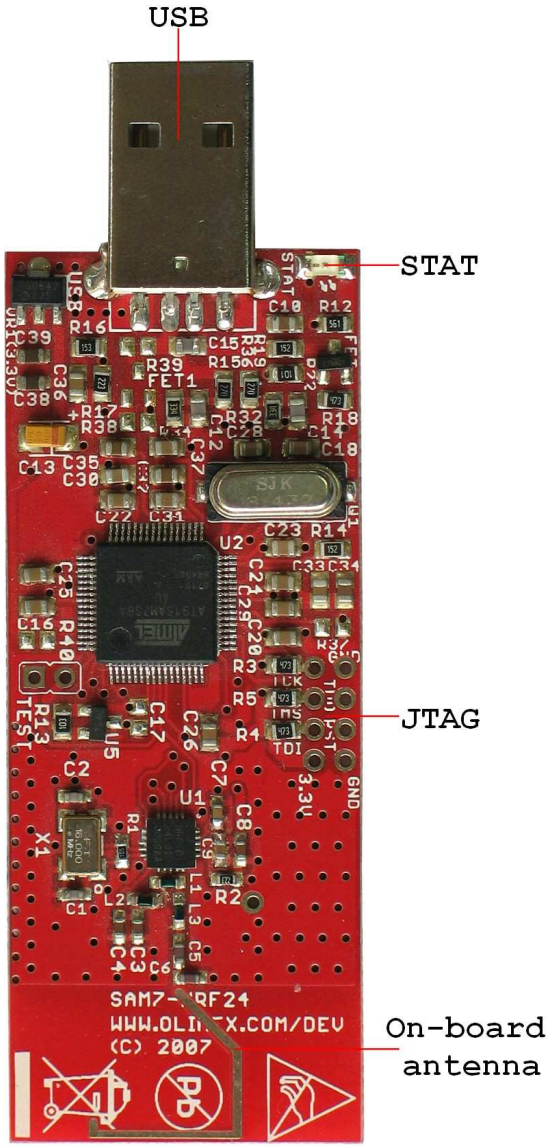

POWER SUPPLY CIRCUIT:

SAM7-NRF24 is power supplied with +5V from USB.

RESET CIRCUIT:

SAM7-NRF24 reset circuit includes U5 – MCP130T, R13 (10k) – pull-up and AT91SAM7S64 pin 39 (NRST).

CLOCK CIRCUIT:

Quartz crystal 18.432 MHz is connected to AT91SAM7S64 pin 61 (XOUT) and pin 62 (XIN).

JUMPER DESCRIPTION:

TEST

Connects AT91SAM7S64 pin 40 (TST) to 3.3V. The pin TST is used for manufacturing test or fast programming mode of the AT91SAM7S64 when asserted high.
There is no component mounted for this jumper.
The TEST jumper is used for programming with SAM-BA:
1. Power down the board
2. Short the TEST jumper
3. Power up the board for 10 sec.
4. Power down the board.
5. Remove TEST jumper
6. Power up the board again.

Now you can connect the board using SAM-BA.
Default state of the jumper is not shorted.

INPUT/OUTPUT:

Power-on LED (red) with name **STAT** – this led shows that +3.3V is applied to the board.

CONNECTOR DESCRIPTIONS:

JTAG (Not typical):

Pin #	Signal Name	Pin #	Signal Name
1	GND	2	TCK
3	TDO	4	TMS
5	RST	6	TDI
7	GND	8	3.3V

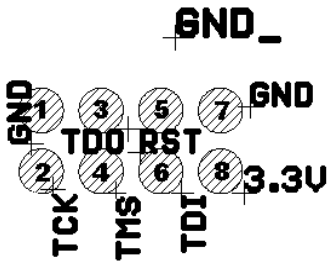

There is no connector mounted on the board for the JTAG.

USB:

Pin #	Signal Name
1	+5V_USB
2	DDM
3	DDP
4	GND

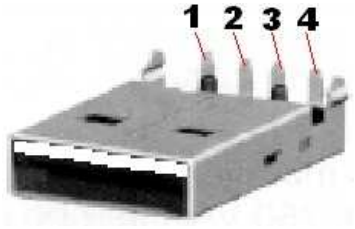

This is view from the bottom.

MECHANICAL DIMENSIONS:

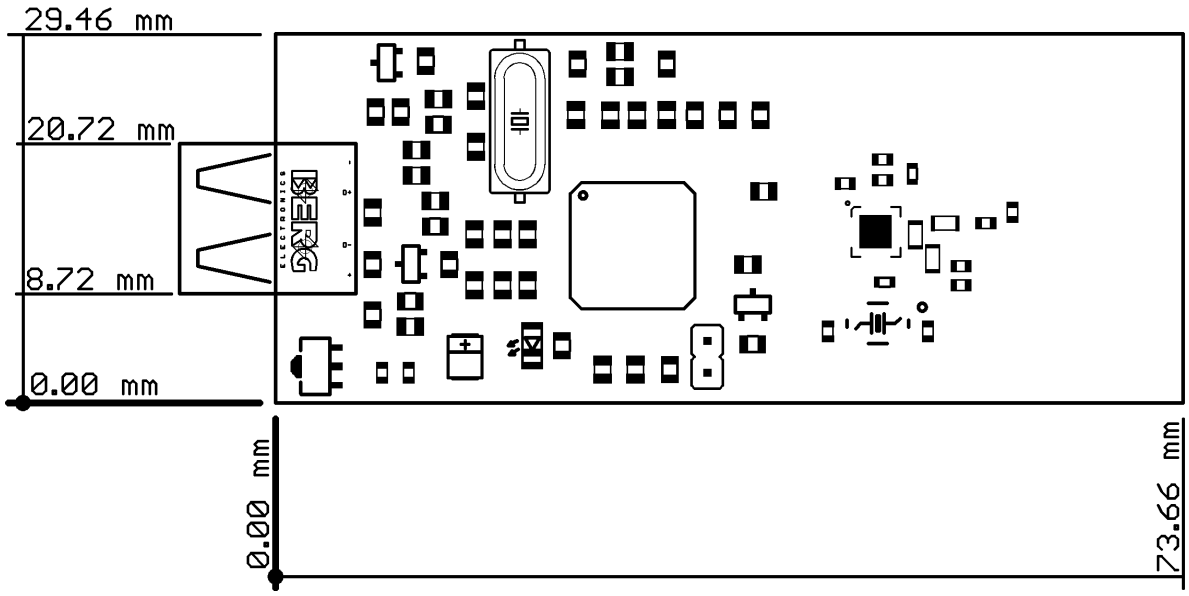

AVAILABLE DEMO SOFTWARE:

–SAM7-nRF24_IAR_5.41_demo

The board comes with software for virtual COM Port.

You have to note that each board comes with software for Node A. So, if you want to communicate between two boards SAM7-NRF24, you have to program the one with Node B. This can be made via SAM-BA, by loading RfVirtualComNodeB.bin, which can be find in our demo software package. Other way to load the board is with some of our programmers/debuggers, via IAR Embedded Workbench IDE 5.41. Load RfVirtualCom.eww, which can be find in our demo software package, too. In workspace drop down menu you have to choose Node B Debug:

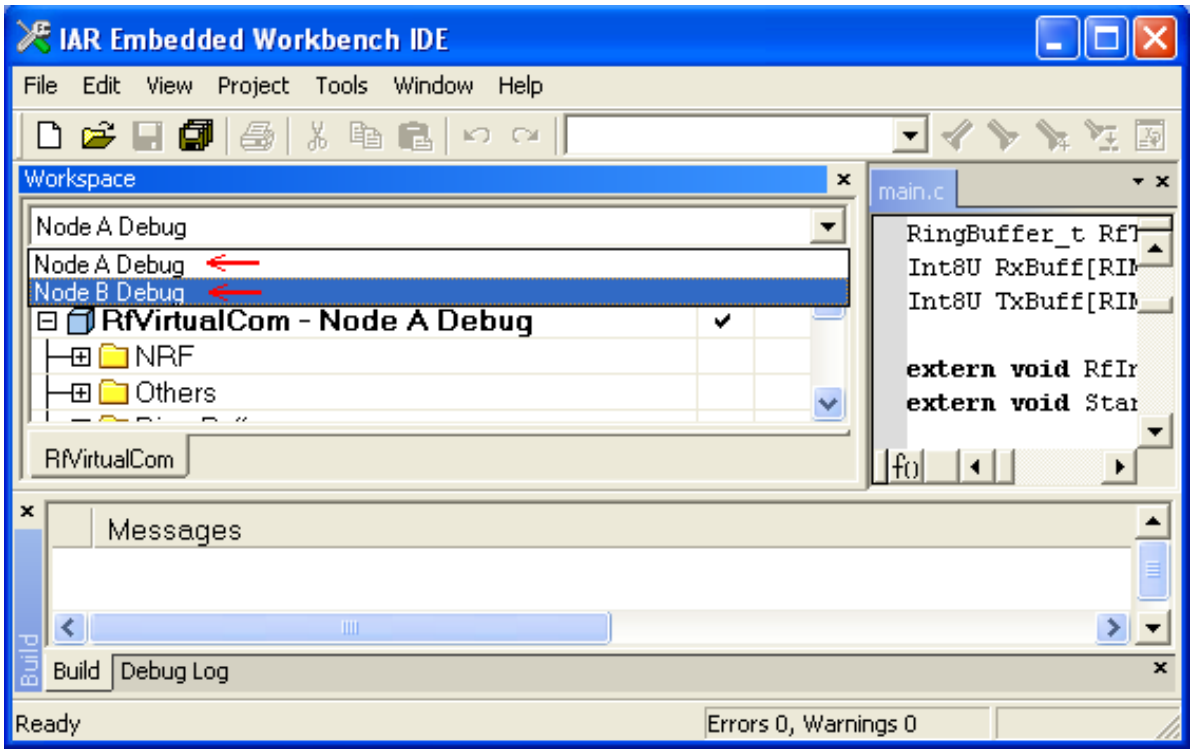

ORDER CODE:

SAM7-NRF24 – assembled and tested board, includes AT91SAM7S64 microcontroller and Nordic NRF24L01

How to order?
You can order to us directly or by any of our distributors.
Check our web www.olimex.com/dev for more info.

Revision history:

Board's Revision:	Rev. Initial – created October 2007
Manual's Revision:	Rev. Initial – created April 2011

Disclaimer:

© 2011 Olimex Ltd. All rights reserved. Olimex®, logo and combinations thereof, are registered trademarks of Olimex Ltd. Other terms and product names may be trademarks of others.

The information in this document is provided in connection with Olimex products. No license, express or implied or otherwise, to any intellectual property right is granted by this document or in connection with the sale of Olimex products.

Neither the whole nor any part of the information contained in or the product described in this document may be adapted or reproduced in any material from except with the prior written permission of the copyright holder.

The product described in this document is subject to continuous development and improvements. All particulars of the product and its use contained in this document are given by OLIMEX in good faith. However all warranties implied or expressed including but not limited to implied warranties of merchantability or fitness for purpose are excluded.

This document is intended only to assist the reader in the use of the product. OLIMEX Ltd. shall not be liable for any loss or damage arising from the use of any information in this document or any error or omission in such information or any incorrect use of the product.