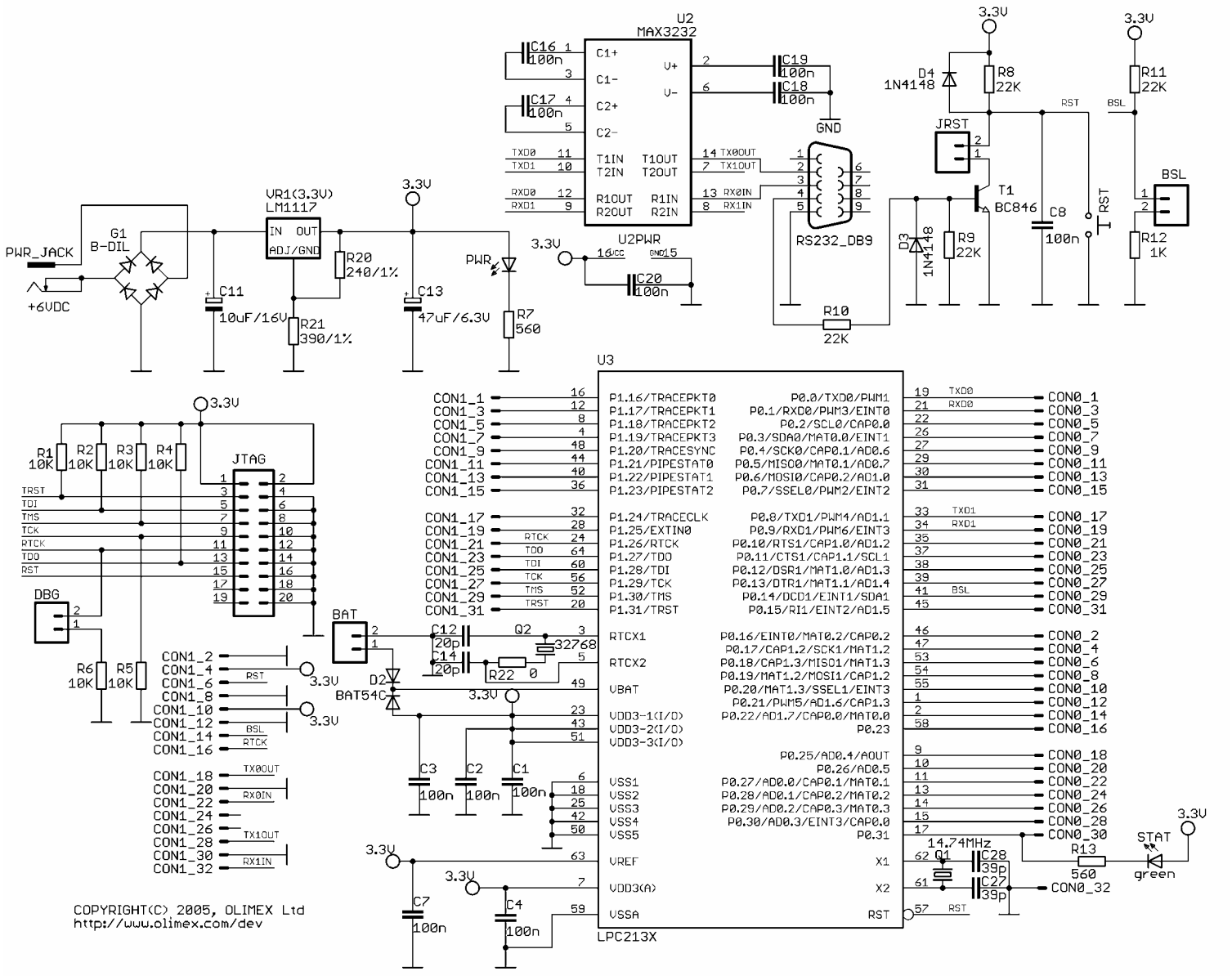
U2
MAX3232
C1+
C1-
C2+
C2-
V+
V-
T1IN
T2IN
T1OUT
T2OUT
R1OUT
R2OUT
R1IN
R2IN
C16 100n
C17 100n
C19 100n
C18 100n
TXD0
TXD1
RXD0
RXD1
TX0OUT
TX1OUT
RX0IN
RX1IN
GND
RS232_DB9
U2PWR
C20 100n
3.3V
D4 1N4148
R8 22K
R11 22K
JRST
T1 BC846
C8 100n
RST
BSL
R12 1K
D3 1N4148
R9 22K
R10 22K
VR1(3.3V)
LM1117
IN OUT
ADJ/GND
R20 240/1%
R21 390/1%
C11 10uF/16V
C13 47uF/6.3V
R7 560
PWR
PWR_JACK
G1 B-DIL
+6VDC
U3
LPC213X
P1.16/TRACEPKT0
P1.17/TRACEPKT1
P1.18/TRACEPKT2
P1.19/TRACEPKT3
P1.20/TRACESYNC
P1.21/PIPESTAT0
P1.22/PIPESTAT1
P1.23/PIPESTAT2
P1.24/TRACECLK
P1.25/EXTIN0
P1.26/RTCK
P1.27/TDO
P1.28/TDI
P1.29/TCK
P1.30/TMS
P1.31/TRST
RTCX1
RTCX2
VBAT
VDD3-1(I/O)
VDD3-2(I/O)
VDD3-3(I/O)
VSS1
VSS2
VSS3
VSS4
VSS5
VREF
VDD3(A)
VSSA
P0.0/TXD0/PWM1
P0.1/RXD0/PWM3/EINT0
P0.2/SCL0/CAP0.0
P0.3/SDA0/MAT0.0/EINT1
P0.4/SCK0/CAP0.1/AD0.6
P0.5/MISO0/MAT0.1/AD0.7
P0.6/MOSI0/CAP0.2/AD1.0
P0.7/SSEL0/PWM2/EINT2
P0.8/TXD1/PWM4/AD1.1
P0.9/RXD1/PWM6/EINT3
P0.10/RTS1/CAP1.0/AD1.2
P0.11/CTS1/CAP1.1/SCL1
P0.12/DSR1/MAT1.0/AD1.3
P0.13/DTR1/MAT1.1/AD1.4
P0.14/DCD1/EINT1/SDA1
P0.15/RI1/EINT2/AD1.5
P0.16/EINT0/MAT0.2/CAP0.2
P0.17/CAP1.2/SCK1/MAT1.2
P0.18/CAP1.3/MISO1/MAT1.3
P0.19/MAT1.2/MOSI1/CAP1.2
P0.20/MAT1.3/SSEL1/EINT3
P0.21/PWM5/AD1.6/CAP1.3
P0.22/AD1.7/CAP0.0/MAT0.0
P0.23
P0.25/AD0.4/AOUT
P0.26/AD0.5
P0.27/AD0.0/CAP0.1/MAT0.1
P0.28/AD0.1/CAP0.2/MAT0.2
P0.29/AD0.2/CAP0.3/MAT0.3
P0.30/AD0.3/EINT3/CAP0.0
P0.31
X1
X2
RST
CON1_1
CON1_3
CON1_5
CON1_7
CON1_9
CON1_11
CON1_13
CON1_15
CON1_17
CON1_19
CON1_21
CON1_23
CON1_25
CON1_27
CON1_29
CON1_31
CON0_1
CON0_3
CON0_5
CON0_7
CON0_9
CON0_11
CON0_13
CON0_15
CON0_17
CON0_19
CON0_21
CON0_23
CON0_25
CON0_27
CON0_29
CON0_31
CON0_2
CON0_4
CON0_6
CON0_8
CON0_10
CON0_12
CON0_14
CON0_16
CON0_18
CON0_20
CON0_22
CON0_24
CON0_26
CON0_28
CON0_30
CON0_32
JTAG
TRST
TDI
TMS
TCK
RTCK
TDO
RST
DBG
R1 10K
R2 10K
R3 10K
R4 10K
R5 10K
R6 10K
BAT
D2 BAT54C
C12 20p
C14 20p
Q2 32768
R22 0
C3 100n
C2 100n
C1 100n
C7 100n
C4 100n
14.74MHz
Q1
C28 39p
C27 39p
R13 560
STAT
green
CON1_2
CON1_4
CON1_6
CON1_8
CON1_10
CON1_12
CON1_14
CON1_16
CON1_18
CON1_20
CON1_22
CON1_24
CON1_26
CON1_28
CON1_30
CON1_32
COPYRIGHT(C) 2005, OLIMEX Ltd
http://www.olimex.com/dev