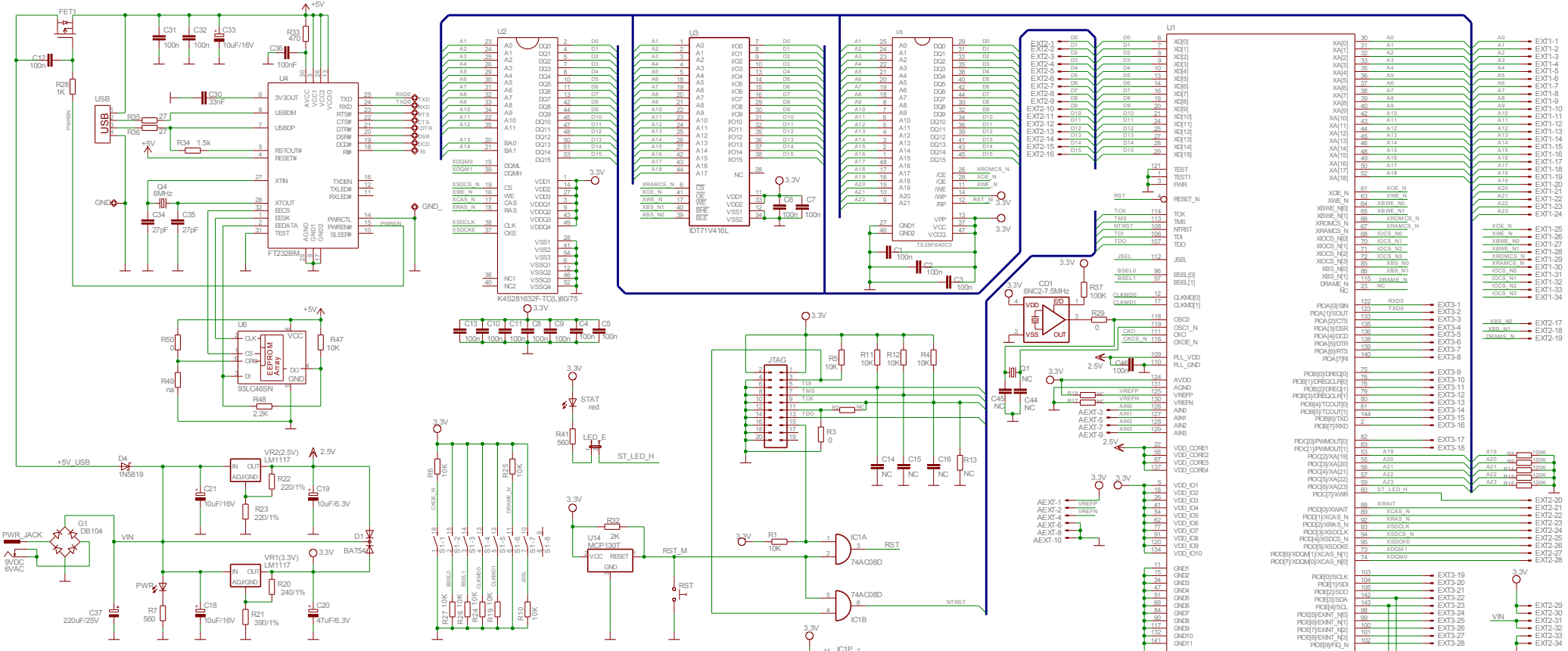

OKI-H5003_rev_C
OLIMEX LTD, BULGARIA
https://www.olimex.com