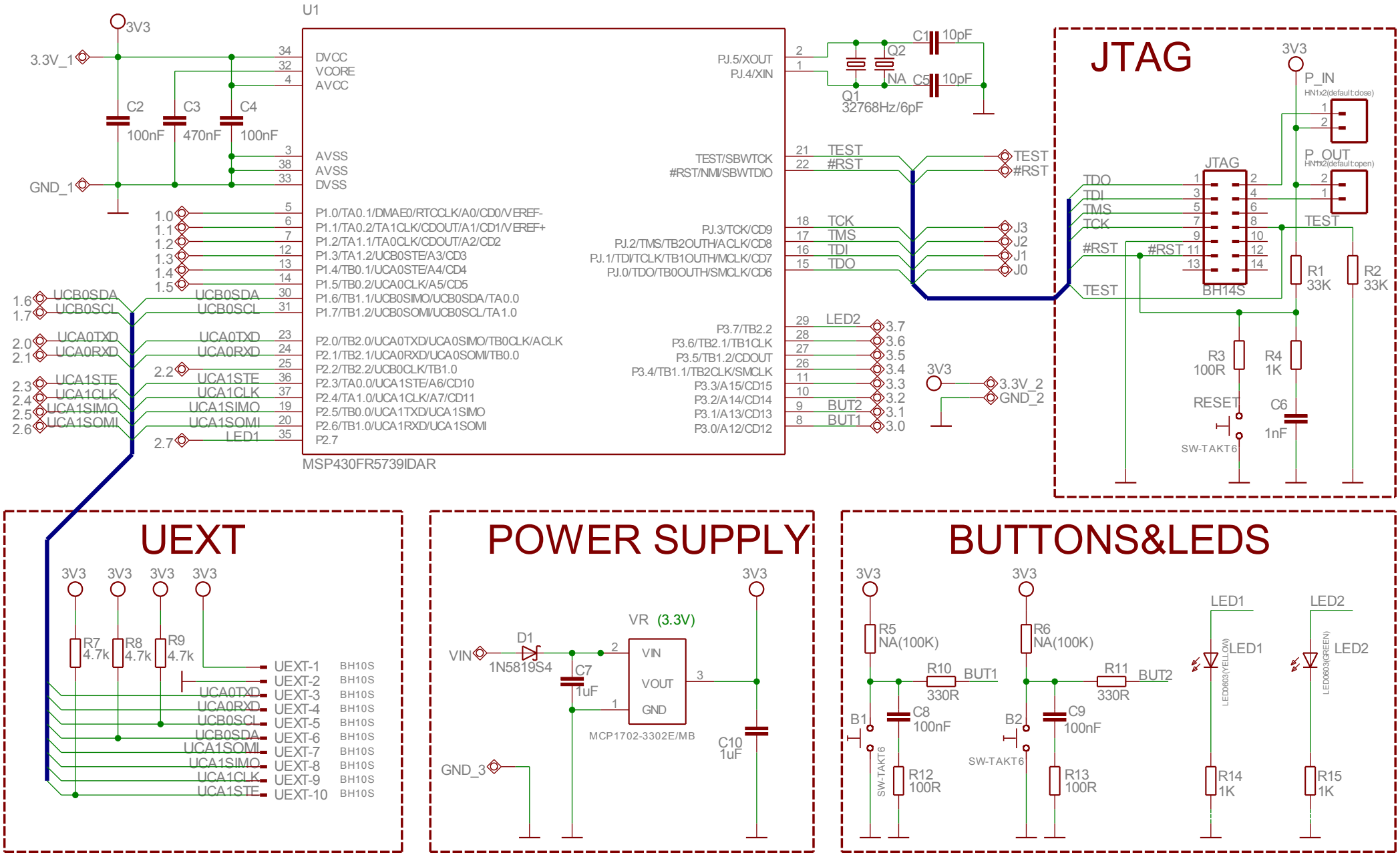

MSP430-HFR5739_rev_B

OLIMEX LTD, BULGARIA

https://www.olimex.com