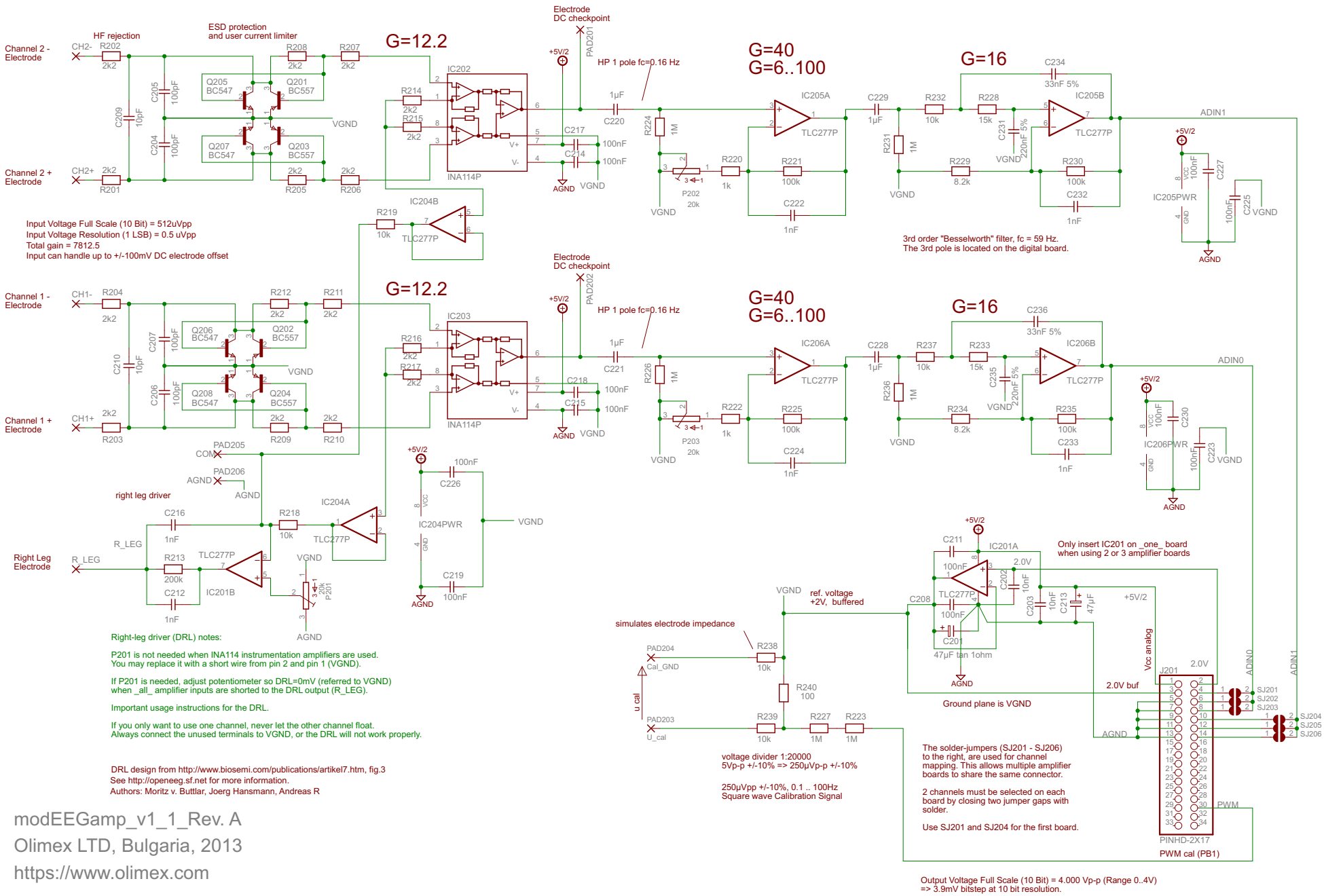

modEEGamp_v1_1_Rev. A
Olimex LTD, Bulgaria, 2013
https://www.olimex.com

This hardware design by Olimex LTD is licensed under a Creative Commons Attribution-ShareAlike 3.0 Unported License.