© COPYRIGHT BY TRP CONNECTOR ALL RIGHTS RESERVED.

REVISIONS					
P	LTR	DESCRIPTION	DATE	DWN	APVD
	D	LOGO CHANGE	23APR2013	JC	KZ

MECHANICAL:

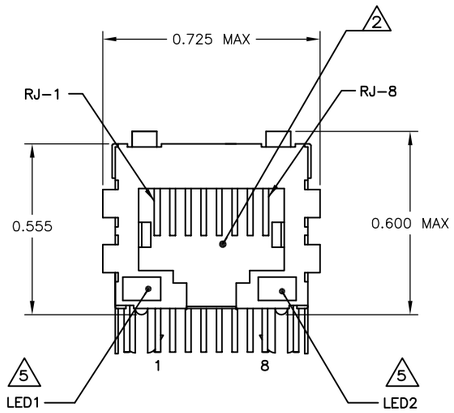

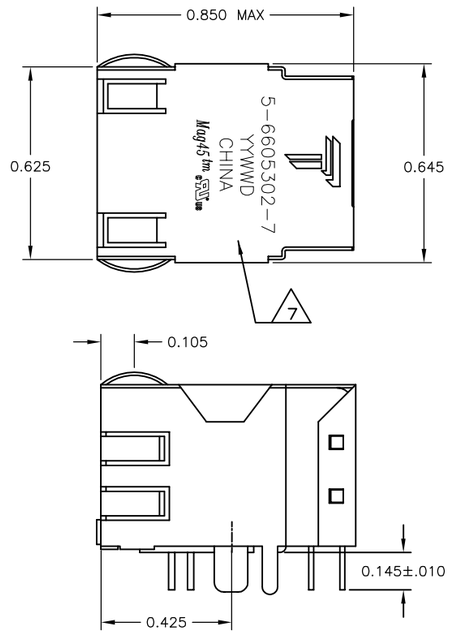

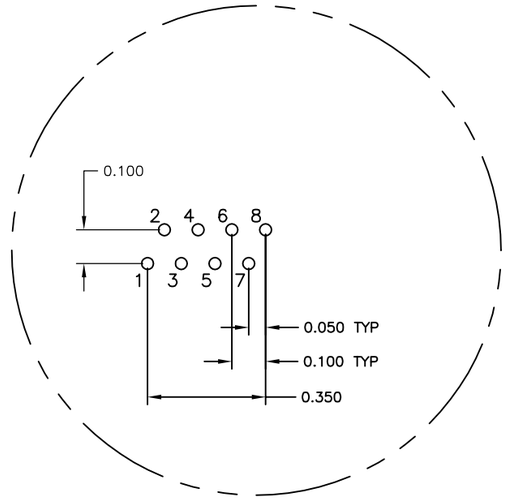

Pin Designations

NOTES:

1. MATERIALS:
HOUSING - THERMOPLASTIC PET POLYESTER FLAMMABILITY RATING UL 94V-0.
SHIELD - .010" THICK, C26800 BRASS PREPLATED WITH 30µINCH SEMI-BRIGHT NICKEL. SOLDER TABS POST DIPPED WITH 100µINCH MIN SAC SOLDER.
MOD JACK CONTACTS - 0.0157 X 0.018" PHOSPHOR BRONZE, 50µINCH MIN OVERALL
NICKEL UNDERPLATE, WITH SELECT 50µINCH MIN HARD GOLD FINISH PLATE SOLDERTAILS WITH 100µINCH MIN MATTE TIN AND/OR SAC SOLDER DIP.
LIGHT EMITTING DIODE(LED) - DIFFUSED EPOXY LENS, .020" x .020" CARBON STEEL WIREFRAME LEADS PRE-PLATED WITH 80µINCH SILVER OVER 40µINCH NICKEL UNDERPLATE OVER 40µINCH COPPER UNDERPLATE. POST-PLATED WITH 100µINCH MIN MATTE TIN AND/OR SAC SOLDER DIP OR PURE TIN SOLDER DIP.

2. RJ45 JACK CAVITY CONFORMS TO FCC RULES AND REGULATIONS PART 68, SUB PART F.

3. MAGNETICS
-IMPEDANCE: 100 OHMS
-TURNS RATIO (CHIP:CABLE): TX = 1:1, RX = 1:1
-OPEN CIRCUIT INDUCTANCE (OCL): 350µH MIN @100kHz, 0.1VRMS, 8mADC BIAS FROM 0°C TO 70°C, TX AND RX
-PERFORMANCE @ 25°C:
INSERTION LOSS (IL): 1.1dB MAX FROM 0.5MHz TO 100MHz
RETURN LOSS (RL): 18dB MIN FROM 0.5MHZ TO 30MHz
18-20LOG(f/30)dB MIN FROM 30.1MHz TO 60MHz
12dB MIN FROM 60.1MHz TO 80MHz
CROSSTALK ATTENUATION: 35dB MIN FROM 0.5MHz TO 40MHz
33-20*LOG(f/50)dB MIN FROM 40.1MHz TO 100MHz
COMMON MODE REJECTION RATIO (CMRR): 30dB MIN FROM 0.5MHz TO 100MHz
-ISOLATION VOLTAGE:2250VDC (MAX) FOR 60 SECONDS WITH A RISE TIME OF 500V/SEC.

4. OPERATING TEMPERATURE: FROM 0°C - +70°C

5. LEDS ARE DRIVEN WITH CONSTANT CURRENT AT APPROX 20mA.
LED COLOR: DOMINANT WAVELENGTH (λD): GREEN 568 nm TYP @ IF=20mA
FORWARD VOLTAGE (VF): GREEN 2.2V TYP @ IF=20mA
DOMINANT WAVELENGTH (λD): YELLOW 588 nm TYP @ IF=20mA
FORWARD VOLTAGE (VF): YELLOW 2.1V TYP @ IF=20mA.

6. INDICATED CONNECTIONS ARE FOR NIC CONFIGURATION. THE MAGNETICS ARE SYMMETRICAL, AND SUPPORT AUTO-MDI/MDIX.

7. TRP CONNECTOR LOGO,TE CONNECTIVITY PART NUMBER, DATE CODE, COUNTRY OF ORIGIN AND AGENCY APPROVAL MARKING IN APPROXIMATE LOCATION SHOWN.

8. THESE PARTS ARE RECOMMENDED FOR WAVE SOLDERING PROCESS, PREHEAT TEMPERATURE IS 120°C TO 160°C, 120 SECONDS TO 180 SECONDS, PEAK SOLDERING TEMPERATURE IS 260 °C MAX, 10 SECONDS MAX.

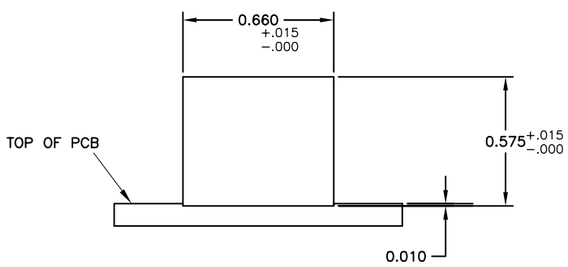

Suggested Panel Cutout

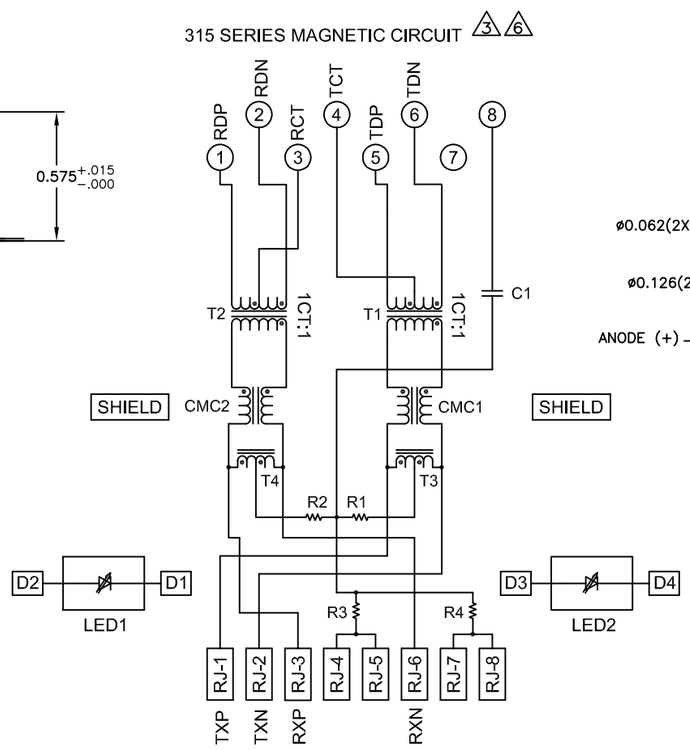

C1=1000pF. 2kV CAPACITOR
R1-R4 = 75 OHMS, 1/16 W RESISTORS

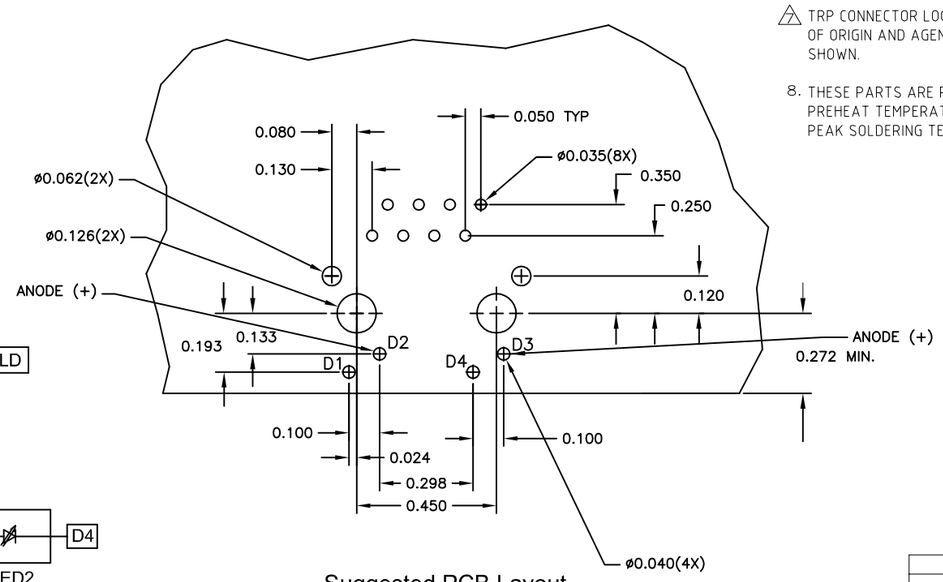

Suggested PCB Layout
(Component Side)

YES	GREEN	YELLOW	5-6605302-8
YES	GREEN	GREEN	5-6605302-7
2KVDECOUPLING CAPACITOR	LED1	LED2	PART NUMBER

THIS DRAWING IS A CONTROLLED DOCUMENT.

DIMENSIONS: INCHES

TOLERANCES UNLESS OTHERWISE SPECIFIED:
0 PLC ± -
1 PLC ± -
2 PLC ± .010
3 PLC ± .005
4 PLC ± -
ANGLES ± -

MATERIAL 1

FINISH 1

DWN 04MAR2005 G. ATTADIA - DOCKS
CHK 04MAR2005 D. FAROLE
APVD 04MAR2005 D. FAROLE

PRODUCT SPEC 108-2100
APPLICATION SPEC -
WEIGHT -

TRP connector
Dongguan China

NAME 1X1 MAG45(TM), 4N2 SCHEMATIC, (10/100 ETHERNET), 315 SERIES CIRCUIT, DECOUPLING CAPACITOR, WITH LEDS

SIZE A1 | CAGE CODE | DRAWING NO C-6605302 | RESTRICTED TO -

CUSTOMER DRAWING | SCALE NTS | SHEET 1 OF 1 | REV D