ITEM	Q'TY	PART NUMBER	PART DESCRIPTION
1	1	LP-4H	Shell, 4 High, Right Angle Light Pipe
2	1	LP-4EP	Light Pipe, 4 High, Right Angle, Extend Profile

REV.	DESCRIPTION	DATE	APPROVED
B	Engineering Update w/o Changes	03/08/04	M. C.
C	Added Note	05/16/08	M. C.

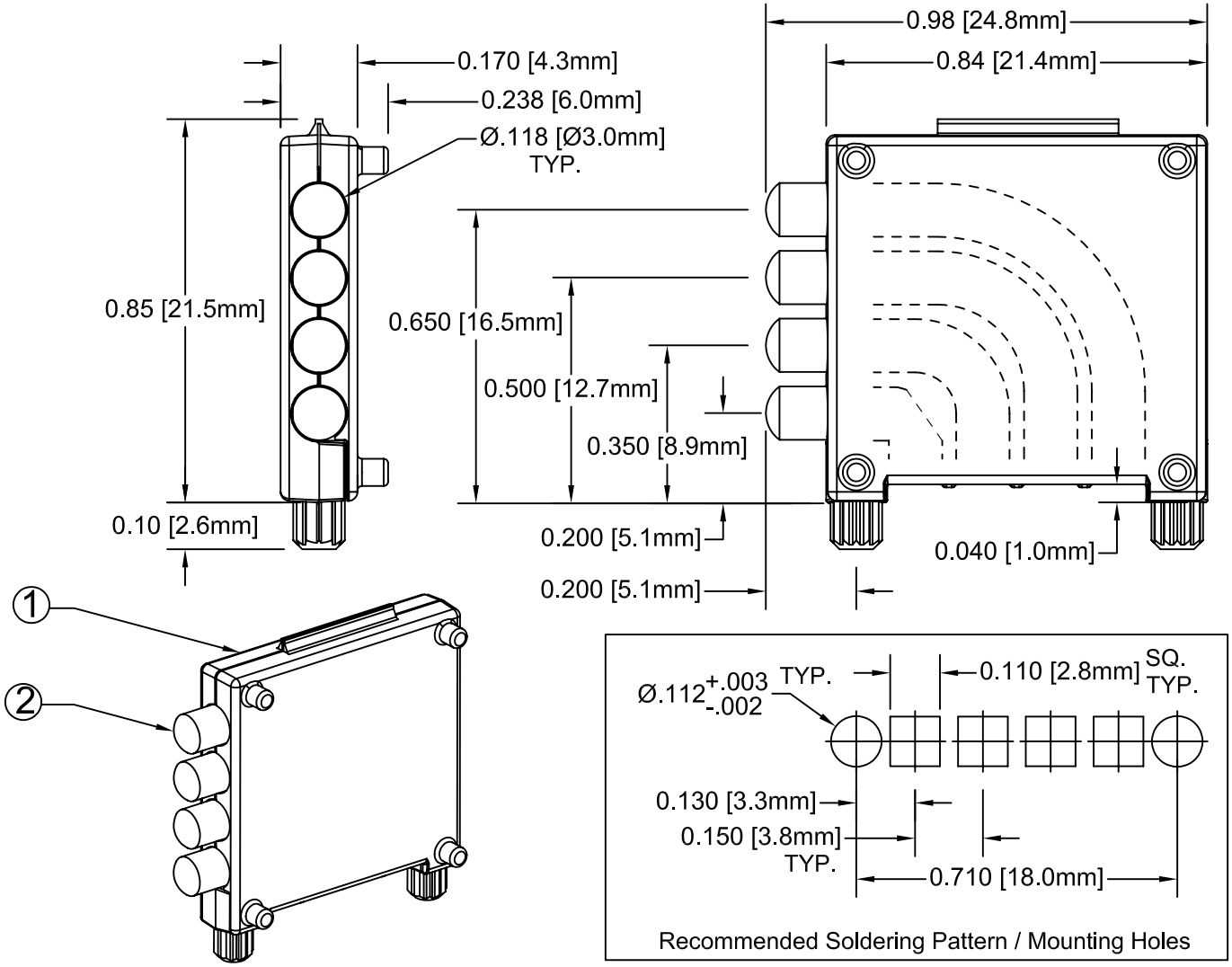

Recommended Soldering Pattern / Mounting Holes

Note: Pre-Assembled and Ultrasonically Welded

STANDARD TOLERANCE
(UNLESS OTHERWISE SPECIFIED)

DECIMALS		ANGULAR	
.X	± .1	X°	± 1°
.XX	± .02		
.XXX	± .010		

BIVAR®
4 THOMAS, IRVINE, CA. 92618
TEL: (949) 951-8808 FAX: (949) 951-3974

TITLE: QUAD-LEVEL LIGHT PIPE ASSEMBLY, EXTENDED LENS

DESIGNED:	DATE:	PART NO:	REVISION:
Michael Chen	08/26/02	LP4-EP	C
CHECKED: S. Irving	DATE: 08/26/02	CAGE CODE : 32559	SHEET # 1 OF 1

CAD GENERATED DOCUMENT, DO NOT MEASURE DRAWING.