REV.	DESCRIPTION	DATE	APPROVED
E	Engineering Update w/o Changes	03/09/04	M. C.

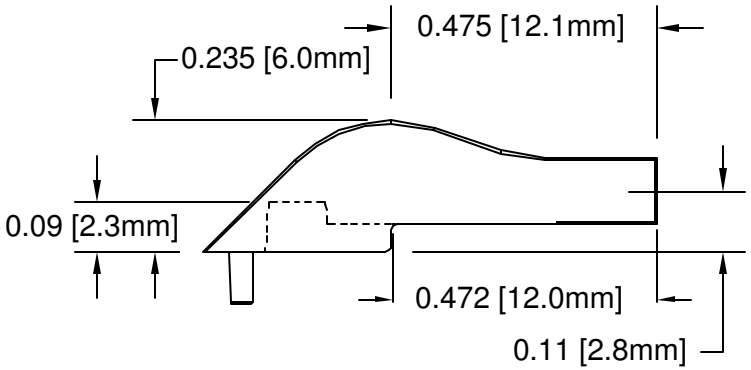

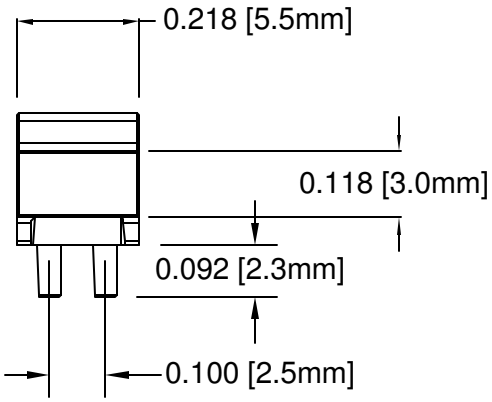

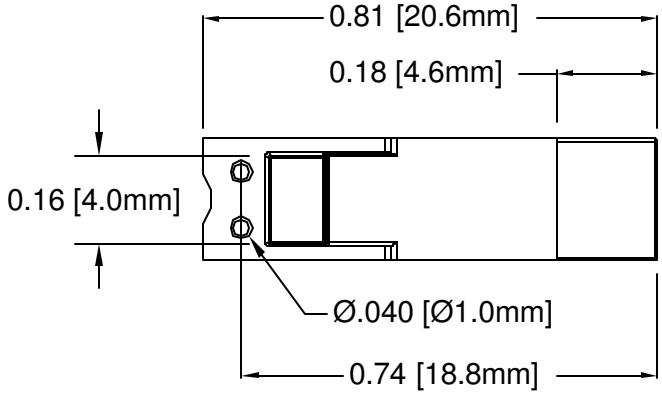

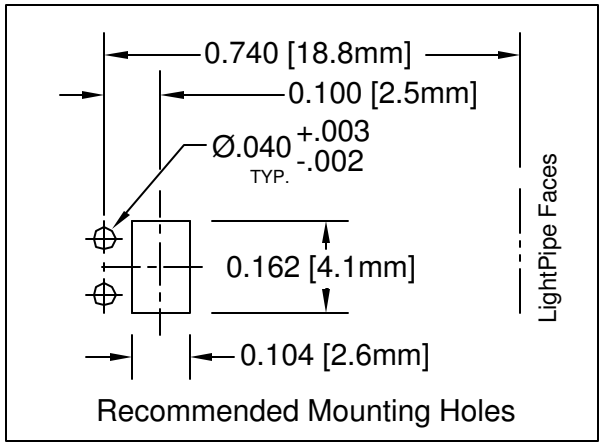

2. MATERIAL: POLYCARBONATE, 94V-0, CLEAR. BIVAR MATERIAL CODE 47-CR.
   SAM YANG CORPORATION POLYCARBONATE 3025N2 CLEAR.
1. GENERAL SPECIFICATIONS: BIVAR MOLDED COMPONENT SPECIFICATION BV00-E101.

STANDARD TOLERANCE
(UNLESS OTHERWISE SPECIFIED)

DECIMALS		ANGULAR
.X	± .1	X° ± 1°
.XX	± .01	
.XXX	± .005	

BIVAR®
4 THOMAS, IRVINE, CA. 92618
TEL: (949) 951-8808 FAX: (949) 951-3974

TITLE: LIGHT PIPE, 90° SURFACE MOUNT

DESIGNED:	DATE:	PART NO:	REVISION:
Michael Chen	09/11/03	SLP-2	E
CHECKED: D. Green	DATE: 09/11/03	CAGE CODE : 32559	SHEET # 1 OF 1

CAD GENERATED DOCUMENT, DO NOT MEASURE DRAWING.