D1RFRD006

REVISION RECORD				
REV	ECO	DESCRIPTION	DRFT	CHKD

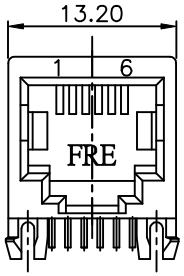

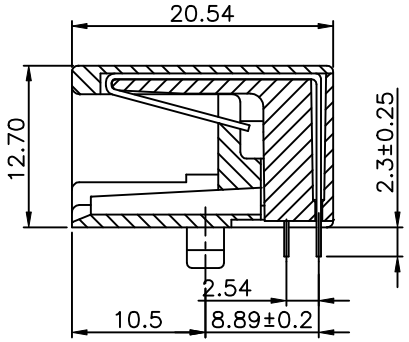

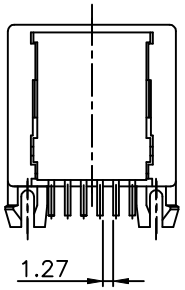

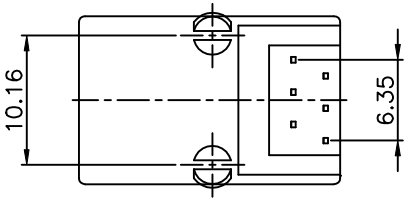

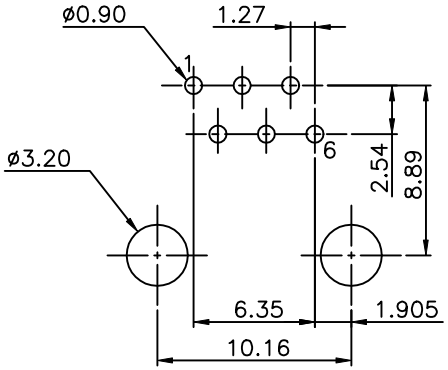

PC Board Layout
Component Side Shown

NOTES:

ELECTRICAL:

1. VOLTAGE RATING : 125 VAC RMS.
2. CURRENT RATING : 1.5 AMP.
3. CONTACT RESISTANCE : 40 MILLIOHMS MAX.
4. INSULATION RESISTANCE: 1000 MEGOHMS MIN @ 500 VDC.
5. DIELECTRIC STRENGTH : 1000 VAC RMS 60Hz, 1MIN.

MECHANICAL:

1. HOUSING MATERIAL : PBT+30%.G.F UL94V-0.
2. CONTACT MATERIAL : PHOSPHOR BRONZE t=0.35mm
3. PLATING : GOLD PLATING OVER NICKEL.
4. OPERATING LIFE : 750 CYCLES MIN.
5. PCB RETENTION PRE-SOLDER : 1 LB MIN.
6. PCB RETENTION POST-SOLDER: 10 LBS MIN.

ENVIRONMENTAL:

1. STORAGE : -40°C TO +85°C.
2. OPERATION: 0°C TO 70°C.
3. WAVE SOLDER TEMPERTURE: 230°C ~250°C(3~5 SECONDS)

MATES WITH MODULAR PLUG CONFORMING TO
FCC PART 68, SUBPART F.
CUL FILE NO. E163191
PART NUMBER: E596X-00P04X-L

2-6P2C
4-6P4C
6-6P6C

1- 3u" 2- 6u" 3-15u"
4-30u" 5-50u"

MM (INCH)	DFTO Qianpu	DATE 5/21/05'	FULL RISE ELECTRONIC CO., LTD
TOLERANCES EXCEPT AS NOTED	CHKD YICAN	DATE 2005/5/21	
MM .0 ±0.20 ± .00 ±0.15 ± .000 ±0.075 ±	MFO	DATE	TITLE 20.57 PCB JACK 6P
	APPVL SAMMY	DATE 2005/5/21	
	MATERIAL :		
ANGLES ±	QT'Y :		DRAWING NO. GE593080-LC / PART NO. SEE NOTE — SIZE A3 — REV 0
THIRD ANGLE PROJECTION	FINISH :		
	SCALE : 2.5:1		DO NOT SCALE DRAWING — SHEET X OF Y

DETACHED LISTS