A1RFRD10

REVISION RECORD				
REV	ECO	DESCRIPTION	DRFT	CHKD
1		DRAWING MODIFY	JAMY 4/19/06	
2		DRAWING MODIFY	Yican 08/01/06	

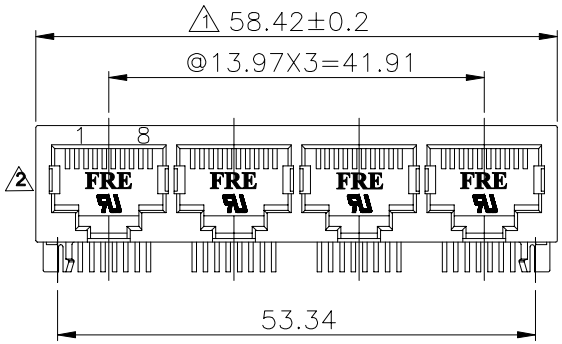

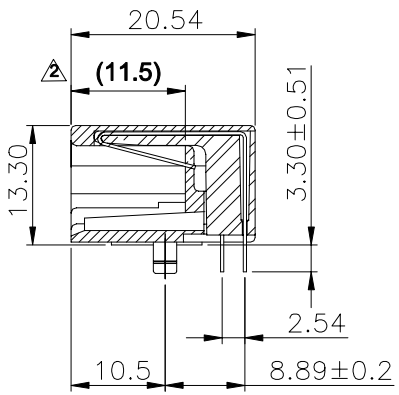

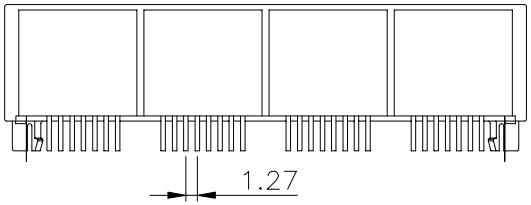

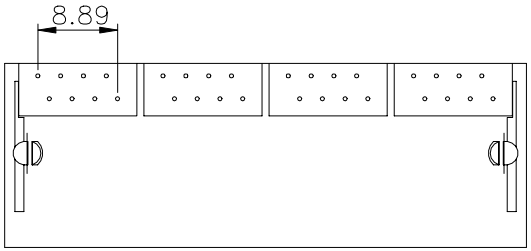

NOTES:

ELECTRICAL:

1. VOLTAGE RATING : 125 VAC RMS.
2. CURRENT RATING : 1.5 AMP.
3. CONTACT RESISTANCE : 35 MILLIOHMS MAX.
4. INSULATION RESISTANCE: 1000 MEGOHMS MIN @ 500 VDC.
5. DIELECTRIC STRENGTH : 1000 VAC RMS 60Hz, 1MIN.

MECHANICAL:

1. HOUSING MATERIAL : NYLON+G.F.30% UL94V-0.COLOR YELLOW
2. CONTACT MATERIAL : PHOSPHOR BRONZE ø0.46mm.
3. PLATING : GOLD PLATING OVER NICKEL.
4. OPERATING LIFE : 750 CYCLES MIN.
5. PCB RETENTION PRE-SOLDER : 1 LB MIN.
6. PCB RETENTION POST-SOLDER: 10 LBS MIN.

ENVIRONMENTAL:

1. STORAGE : -40°C TO +85°C.
2. OPERATION: -40°C TO +85°C.
3. WAVE SOLDERING TEMPERATURE:255°C TO 265°C(5~10 SECONDS).
4. **RoHS COMPLIANT**

MATES WITH MODULAR PLUG CONFORMING TO FCC PART 68, SUBPART F.

ROHS PART NUMBER: E5908-00CL8X-L

2- 6u" 5-50u"
3-15u" 4-30u"

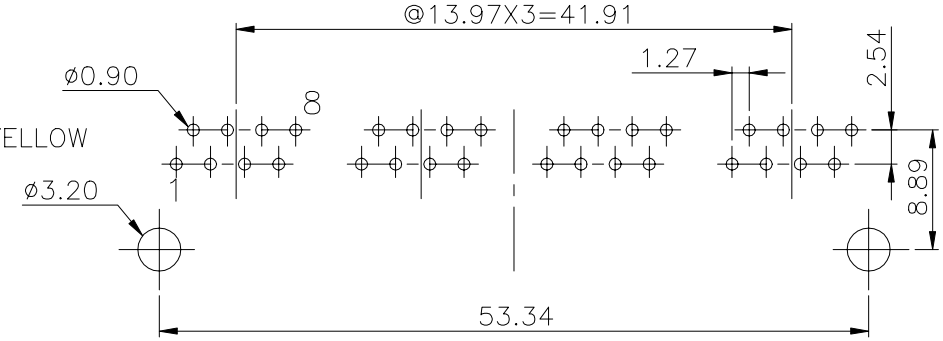

PC Board Layout Component Side Shown

Pulse A TECHNITROL COMPANY — RoHS Compliant

FULL RISE ELECTRONIC CO., LTD

MM (INCH)	DFTO JAMY	DATE 10/17/05	TITLE 20.57 PCB JACK 8P
TOLERANCES EXCEPT AS NOTED	CHKD ANKUE	DATE 2006/8/3	
MM .0 ± 0.2 ± .00 ± 0.15 ± .000 ± 0.075 ±	MFO	DATE	
	APPVL LUSHENG	DATE 2006/8/3	
ANGLES ± 0.5	MATERIAL :		DRAWING NO. GE593266-LA / PART NO. SEE NOTE
	QT'Y :		SIZE A3 REV 2
THIRD ANGLE PROJECTION	FINISH :		
DETACHED LISTS	SCALE : 1.5:1		DO NOT SCALE DRAWING SHEET X OF Y