POWER TRANSFORMERS

For TinySwitch™ TNY253, TNY254 and TNY255

Pulse
A TECHNITROL COMPANY

- Designed for use with Power Integration TNY253, TNY254 and TNY255 in low cost AC to DC converters for a large range of applications
- 4000 Vrms isolation
- Materials meet UL 94V-0 and IEC 950
- No audible noise
- Only two parts to cover a large range of output voltage

Electrical Specifications @ 25°C — Operating Temperature -30°C to +110°C

Part Number	Turns Ratio	Leakage Inductance (µH)	Matched To	Power	Applications
P5000NL	1:0.07:0.07	180 MAX	**TNY253**	Up to 2 W	AC: 85 to 265 Vac, 2 DC outputs from 3.3 Vdc up to 6 Vdc or 1 DC output from 6 Vdc up to 12 Vdc
P5001NL	1:0.1:0.1	180 MAX			AC: 85 to 265 Vac, 2 DC outputs from 6 Vdc up to 12 Vdc or 1 DC output from 12 Vdc up to 24 Vdc
P5004NL	1:0.07:0.07	200 MAX	**TNY254**	Up to 4 W	AC: 85 to 265 Vac, 2 DC outputs from 3.3 Vdc up to 5.5 Vdc or 1 DC output from 6 Vdc up to 12 Vdc
P5005NL	1:0.1:0.1	200 MAX			AC: 85 to 265 Vac, 2 DC outputs from 6 Vdc up to 10 Vdc or 1 DC output from 12 Vdc up to 24 Vdc
P5008NL	1:0.07:0.07	100 MAX	**TNY255**	Up to 5.5 W	AC: 85 to 265 Vac, 2 DC outputs from 3.3 Vdc up to 6 Vdc or 1 DC output from 6 Vdc up to 18 Vdc
P5009NL	1:0.1:0.1	100 MAX			AC: 85 to 265 Vac, 2 DC outputs from 6 Vdc up to 12 Vdc or 1 DC output from 12 Vdc up to 24 Vdc

Mechanical

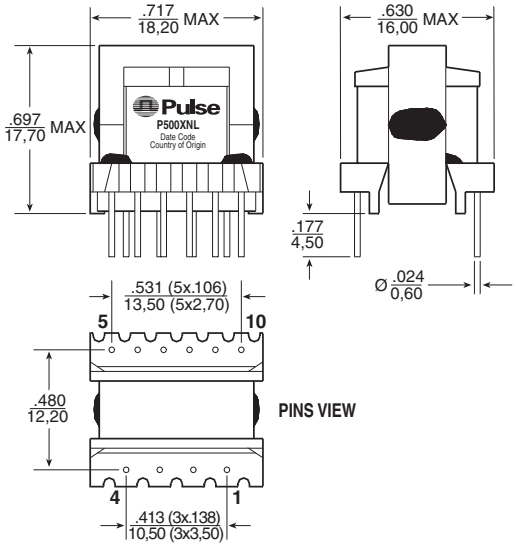

Schematic

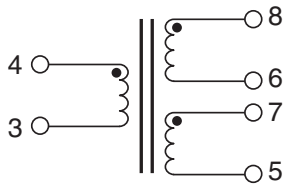

Weight . . . . . .6.7 grams
Tray 40/tray
Dimensions: Inches
mm
Unless otherwise specified, all tolerances are ± .010 / 0,25

For More Information:

Pulse Worldwide Headquarters
12220 World Trade Dr.
San Diego, CA 92128
U.S.A.
www.pulseeng.com
Tel: 858 674 8100
Fax: 858 674 8262

Pulse Europe
Einsteinstrasse 1
D-71083 Herrenberg
Germany
Tel: 49 7032 7806 0
Fax: 49 7032 7806 12

Pulse China Headquarters
B402, Shenzhen
Tech-Innovation International
Tenth Kejinan Rd.
High-Tech Industrial Park
Nanshan District, Shenzhen
China
Tel: 86 755 33966678
Fax: 86 755 33966700

Pulse North China
Room 1503
XinYin Building
No. 888 YiShan Rd.
Shanghai 200233
China
Tel: 86 21 54643211/2
Fax: 86 21 54643210

Pulse South Asia
150 Kampong Ampat
#07-01/02
KA Centre
Singapore 368324
Tel: 65 6287 8998
Fax: 65 6280 0080

Pulse North Asia
No. 26
Kao Ching Rd.
Yang Mei Chen
Tao Yuan Hsien
Taiwan, R. O. C.
Tel: 886 3 4641811
Fax: 886 3 4641911

Performance warranty of products offered on this data sheet is limited to the parameters specified. Data is subject to change without notice. Other brand and product names mentioned herein may be trademarks or registered trademarks of their respective owners. © Copyright, 2007. Pulse Engineering, Inc. All rights reserved.