UNCONTROLLED DOCUMENT

PART NUMBER	REV.
SSF-LXH4RAGD	B

REV.	E.C.N. NUMBER AND REVISION COMMENTS	DATE
A	CHANGED DIM. WHERE NOTED.	7.5.95
B	E.C.N. #10692.	12.12.00

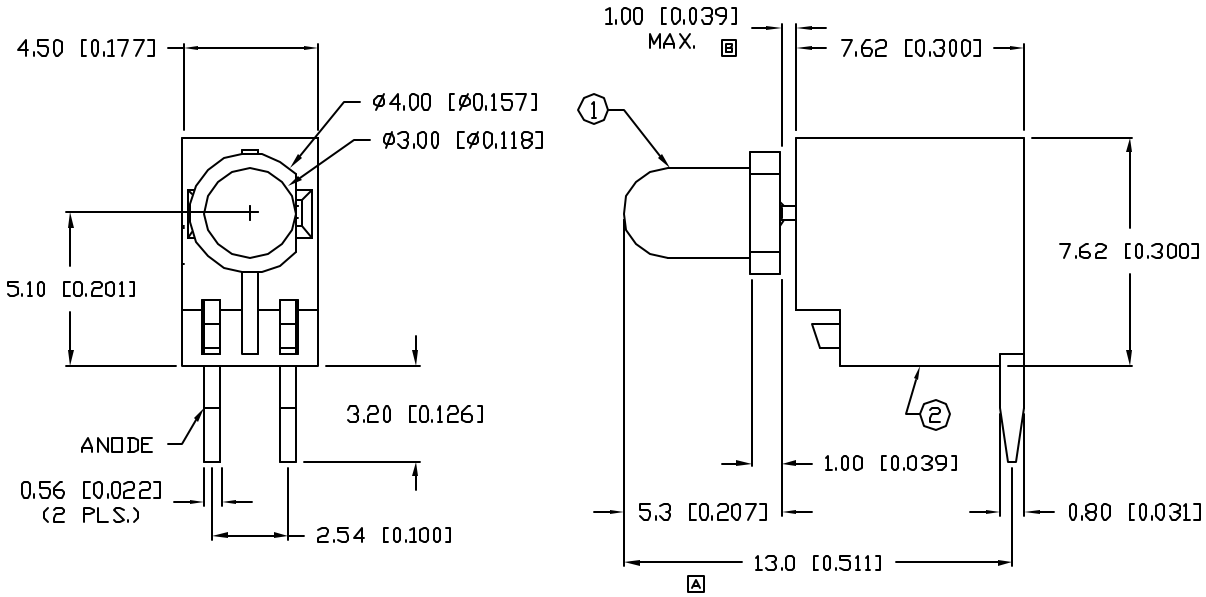

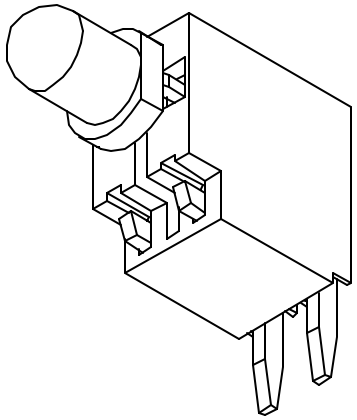

ELECTRO-OPTICAL CHARACTERISTICS T_A=25°C I_f= 20mA

PARAMETER	MIN	TYP	MAX	UNITS	TEST COND
PEAK WAVELENGTH		565		nm	
FORWARD VOLTAGE		2.1	2.8	V_f	
REVERSE VOLTAGE	5.0			V_r	I_r=100µA
AXIAL INTENSITY		30		mcd	I_f=20mA
VIEWING ANGLE		60		2x theta	
EMITTED COLOR:	GREEN				
EPOXY LENS FINISH:	GREEN DIFFUSED				

LIMITS OF SAFE OPERATION AT 25°C

PARAMETER	MAX	UNITS
PEAK FORWARD CURRENT*	150	mA
STEADY CURRENT	25	mA
POWER DISSIPATION	105	mW
DERATE FROM 25°C	-1.3	mW/°C
OPERATING, STORAGE TEMP.	-40 TO +85	°C
SOLDERING TEMP.	+260	°C
2.0mm FROM BODY		3 SEC. MAX

* t<10µS

NOTES:

1. SSL-LX3054GD LED.
2. IFS-LX4FRA-1 LAMP SOCKET.
3. CUT LED LEADS 5mm LONG.
4. ASSEMBLE IN SOCKET, POLARITY AS SHOWN.

UNCONTROLLED DOCUMENT

*UNLESS OTHERWISE SPECIFIED TOLERANCES PER DECIMAL PRECISION ARE: X=±1 (±0.039), X.X=±0.5 (±0.020), X.XX=±0.25 (±0.010), X.XXX=±0.127 (±0.005). LEAD SIZE=±0.05 (±0.002), LEAD LENGTH=±0.75 (±0.030). MIN= +DECIMAL PRECISION -0.00 MAX.= +0.00 -DECIMAL PRECISION

REV.	PART NUMBER
B	SSF-LXH4RAGD

T-1 LAMP, GREEN FAULT INDICATOR.

CONFIDENTIAL INFORMATION
THE INFORMATION CONTAINED IN THIS DOCUMENT IS THE PROPERTY OF LUMEX INC. EXCEPT AS SPECIFICALLY AUTHORIZED IN WRITING BY LUMEX INC., THE HOLDER OF THIS DOCUMENT SHALL KEEP ALL INFORMATION CONTAINED HEREIN CONFIDENTIAL AND SHALL PROTECT SAME IN WHOLE OR IN PART FROM DISCLOSURE AND DISSEMINATION TO ALL THIRD PARTIES.

RELIABILITY NOTE
OUR MANY YEARS OF EXPERIENCE DATA ACCUMULATION INDICATE THAT SOLDER HEAT IS A MAJOR CAUSE OF EARLY AND FUTURE FAILURE. PLEASE PAY ATTENTION TO YOUR SOLDERING PROCESS.

LUMEX
290 E. HELEN ROAD
PALATINE, IL 60067-6976
PHONE: +1.847.359.2790
US WEB: www.lumex.com
TW WEB: www.lumex.com.tw

DRAWN BY:	CHECKED BY:	APPROVED BY:	DATE: 9.1.92
CT			PAGE: 1 OF 1
			SCALE: N/A