Mallory Sonalert Products,Inc.	Part #: SC628FW
Sales Outline Drawing	Revision: **B**

Specifications:

Sound Level Category	Soft
Mode of Operation	Fast Warble @ 0.5 - 2.5 PPS
Voltage Rating	6 to 28 VDC
Frequency	2900 ± 500 Hz
Loudness @ 2 FT	60 to 71 dB(A) Typ.
Loudness @ Min Vdc	55/68 dB(A) @ 2 Feet and 6 Vdc
Loudness @ Max Vdc	70/80 dB(A) @ 2 Feet and 28 Vdc
Current Draw	2-8 mA
Housing Material	6/6 Nylon, Color: Black
Storage Temperature	-40°to +85°C
Operating Temperature	-30°to +65°C
Panel Mounting	Recommended hole size is 1.25"(31.75mm). Thread front will fit standard 30mm(1.181") hole.
Knurled Nut	Used to attach part to panel. The max recommended torque is 10 in-lbs.
Weight (Typical)	1.6 oz (45g)
NEMA 3R,4X, & 12	Approved with use of ACC03.
Options	Please contact factory.

Dimensions: Inches (mm)

PART DIMENSIONS BEFORE CODE DATE 1252 5

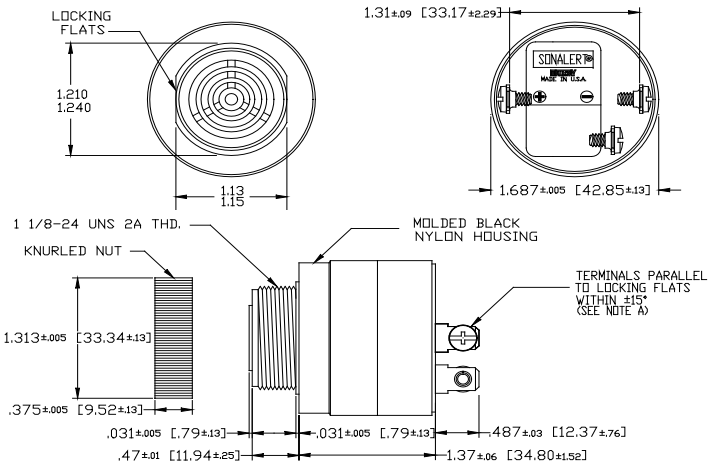

NOTE A: TERMINALS-.032 BRASS TIN PLATED, TAPPED FOR #6-32 SCREW. TWO #6-32 NICKEL PLATED BRASS SCREWS INCLUDED. WILL ACCEPT 1/4" QUICK CONNECT.

NOTE B: MOUNTING- REMOVE BLACK PLASTIC NUT AND INSERT THREADED FRONT THROUGH 1.25" HOLE PUNCHED IN PANEL. IF ORIENTATION IS NEEDED, NOTE LOCKING FLATS ON DRAWING. SCREW NUT BACK ON. DO NOT OVERTIGHTEN.

PART DIMENSIONS AFTER CODE DATE 1301 1

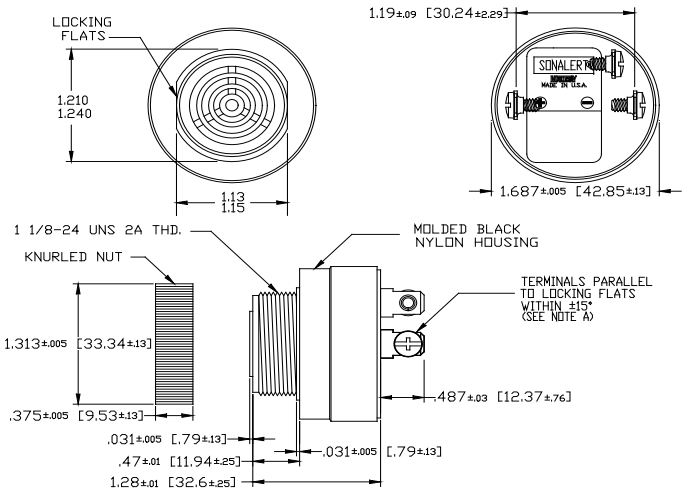

NOTE A: TERMINALS-.032 BRASS TIN PLATED, TAPPED FOR #6-32 SCREW. TWO #6-32 NICKEL PLATED BRASS SCREWS INCLUDED. WILL ACCEPT 1/4" QUICK CONNECT.

NOTE B: MOUNTING- REMOVE BLACK PLASTIC NUT AND INSERT THREADED FRONT THROUGH 1.25" HOLE PUNCHED IN PANEL. IF ORIENTATION IS NEEDED, NOTE LOCKING FLATS ON DRAWING. SCREW NUT BACK ON. DO NOT OVERTIGHTEN.

PRODUCES TWO TONES ALTERNATELY WHEN USED WITH ADDITIONAL CONTINUOUS UNIT AS SHOWN.

Wiring Diagram

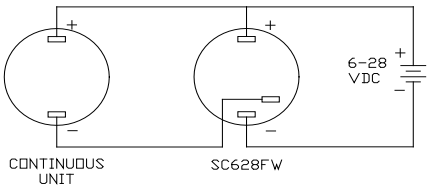

4411 South High School Road, Indianapolis, Indiana 46241 U.S.A · Phone: (317) 612-1000 Fax: (317) 612-1010 www.mallory-sonalert.com