Mallory Sonalert Products Inc.	Part # SC648MAH
Sales Outline Drawing	Revision A

Specifications: Military Unit

Sound level Category	Medium Sound Level
Mode of Operation	Continuous
Mounting	Panel (see note B)
Voltage Rating	10 to 48 Vac/dc
Frequency	4500 Hz ±500 Hz
Loudness (Min. Voltage)	68 dB(A) min. @ 2 FT and 10 Vac/dc
Loudness (Max Voltage)	80 dB(A) min. @ 2FT and 48 Vac/dc
Current Draw	4 mA Max @ 10 Vac/dc
Current Draw	19 mA Max @ 48 Vac/dc
Storage Temperature	-65°C to +85°C
Operating Temperature	-40°C to +85°C
Weight (Typical)	2.1 oz (59 g)
Housing	6/6 Nylon, Color Black
Options	For other options contact factory

Dimensions: Inches (mm)

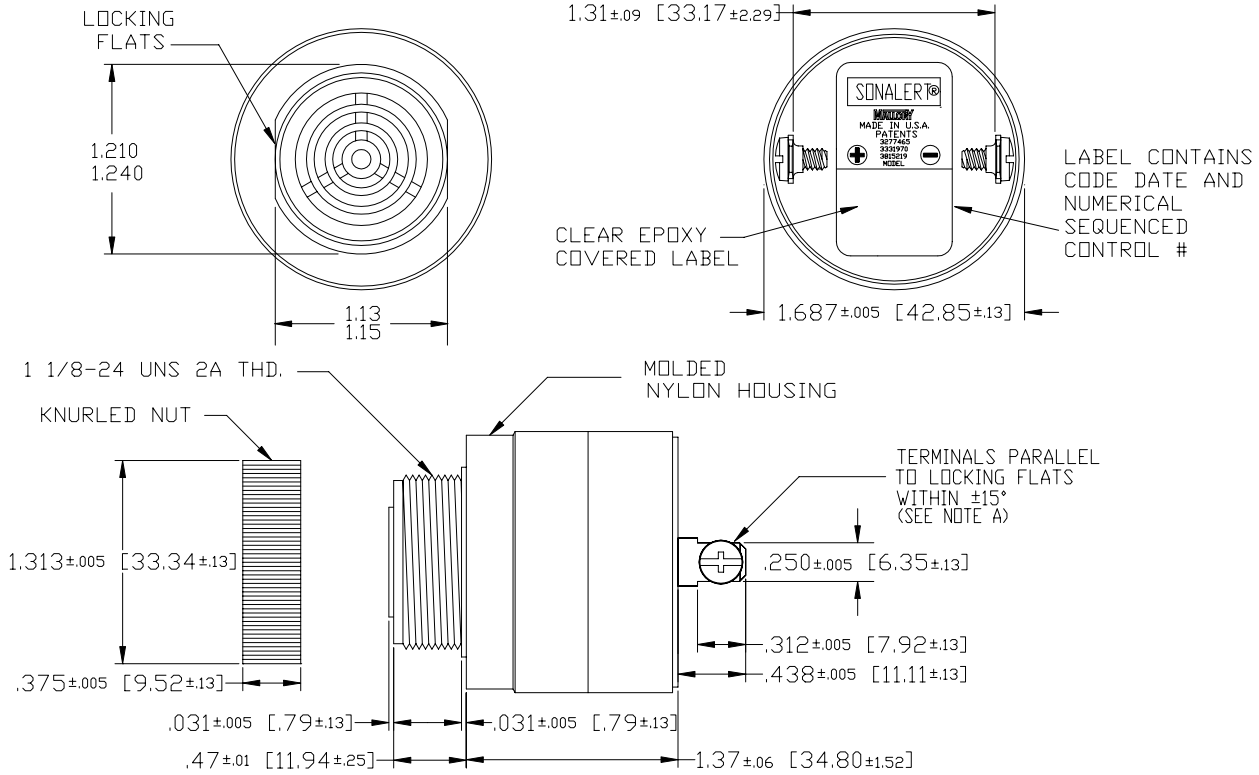

NOTE A: TERMINALS-.032 BRASS TIN PLATED, TAPPED FOR #6-32 SCREW. TWO #6-32 NICKEL PLATED BRASS SCREWS INCLUDED. WILL ACCEPT 1/4" QUICK CONNECT.

NOTE B: MOUNTING- REMOVE KNURLED NUT AND INSERT THREADED FRONT THROUGH 1.25" HOLE PUNCHED IN PANEL, IF ORIENTATION IS NEEDED, NOTE LOCKING FLATS ON DRAWING. SCREW NUT BACK ON. DO NOT OVERTIGHTEN.