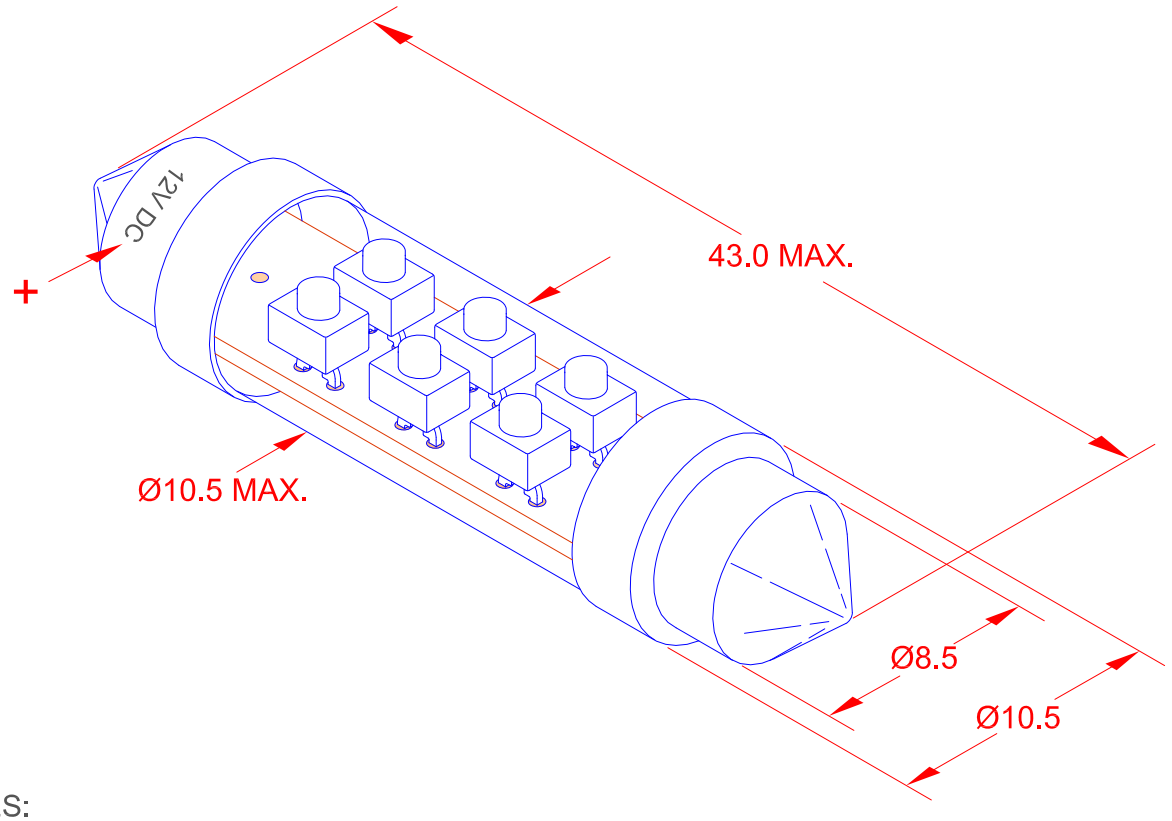

NOTES:
1. LED includes integrated diode for reverse voltage protection.
2. LED includes integrated resistor for current limiting.

TYPICAL ELECTRICAL & OPTICAL OPERATING CHARACTERISTICS
(Ta = 25 degree C)

PART NUMBER	EMITTING COLOR	AMPERAGE mA	VOLTAGE Vdc	LUMENS	COLOR COORDINATES
LE-0603-02R	RED	20mA	12	2	630nm
LE-0603-02Y	YELLOW	20mA	12	2	595nm
LE-0603-02G	GREEN	20mA	12	9	525nm
LE-0603-02B	BLUE	20mA	12	2	470nm
LE-0603-02W	WHITE 9000K	14mA	12	10	x = 0.29 y = 0.28
LE-0603-02WW	WHITE 3000K	14mA	12	6	x = 0.43 y = 0.40

REV. NO.	DESCRIPTION/ECO NUMBER	APPV'D DATE
F	VOLTAGE & LUMENS NO. CHANGE	4/2/12
E	ADD -02WW & CANCEL PL-1201-06	2/21/12
D	CHANGE WHITE TO 14mA	12/8/10
C	CHANGE DIA. TO 10.5 MAX.	11/10/09
B	CHANGE MOL TO 43.0 MAX.	1/22/09
A	CHANGE CHARTS & ADD NOTES	8/25/08
	ENGR. RELEASE & CANCEL PL-0603-02-1 TO -5	7/5/06

METRIC
THIRD ANGLE PROJECTION

DIMENSIONS ARE IN MILLIMETERS
TOLERANCE UNLESS OTHERWISE SPECIFIED
1 PL +/- 0.2
2 PL +/- 0
ANGLE +/- 0

JKL COMPONENTS CORPORATION

TITLE: LED FESTOON LAMP

DRAWN BY	APPV'D BY	DATE	SIZE	FSCM NO.	DRAWING NO.
L. WENGSTROM	L.R.	4/2/12	A	55335	LE-0603-02

- CAD DRAWING -
MANUAL REVISIONS NOT PERMITTED

SCALE	RELEASED DATE	REVISION DATE	REV. NO.	SHEET
NONE	7/5/06	4/2/12	F	1 OF 1