| SIGN | DATE | DESCRIPTION | APPROVER |
|---|---|---|---|
| | | | |

*THIS IS CAD DRAWING, DO NOT REVISE MANUALLY!!!*

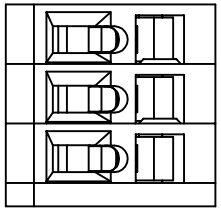

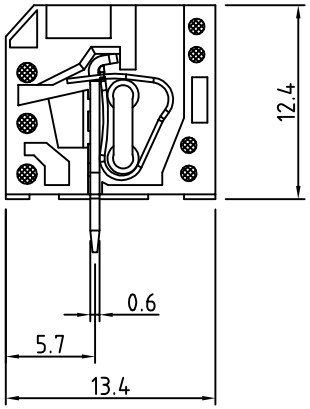


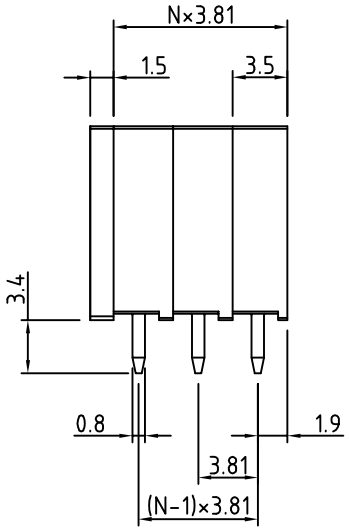


N=Number of contacts

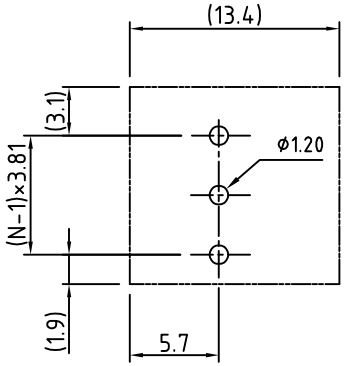


P.C.B LAYOUT

Material:

- Terminal body
- (Contact pin): Brass
- Wire guard: Stainless steel
- Surface of solder tail: Tin plated
- Insulator(housing): Thermoplastic (UL94V-0)

| Electrical: | cULus |
|---|---|
| Voltage rating: | 300V |
| Current rating: | 8A |
| Wire range: | |
| Solid wire(AWG): | 14-28 |
| Stranded wire(AWG): | 14-28 |
| Wire strip length: | 6-7mm |
| Withstanding Voltage: | 1.6KV |
| Operating temperature: | -30°C to +105°C |
| Soldering temperature: | 250°C±10°C/5 Sec |

RoHS Compliant

PART NUMBER:

OSTHMXX3080

No. of Poles
02: 2 Poles
:
:
24: 24 Poles

COLOR
0: Black
5: Green
6: Blue
8: Grey (Standard)

THESE DRAWINGS AND SPECIFICATIONS ARE THE PROPERTY OF ON-SHORE TECHNOLOGY, INC. AND SHALL NOT BE REPRODUCED, COPIED OR USED IN ANY MANNER WITHOUT THE PRIOR WRITTEN CONSENT OF ON-SHORE TECHNOLOGY, INC.

ON-SHORE TECHNOLOGY, INC.

| | | | | | |
|---|---|---|---|---|---|
| TITLE | OSTHM 3.81mm Series Dip solder Type | | | | |
| PART NO. | OSTHMXX3080 | | | DWG NO. | OSTHMXX3080.DWG |
| APPROVED | CHECKED | DESIGNED | DRAWN | CUST NO. | |
| | | Tony 2006.03.11 | Tony 2006.03.11 | SHEET: 01/01 | UNIT: mm<br>SCALE: NONE<br>REV.: B |

| Tolerance | |
|---|---|
| X. | ±0.50 |
| X.X | ±0.30 |
| X.XX | ±0.10 |
| X° | ±1° |