SPECIFICATIONS

PARAMETERS	VALUES	UNITS
RATED VOLTAGE	24	Vdc
OPERATING VOLTAGE RANGE	20 ~ 28	Vdc
RATED CURRENT (MAX)	25	mA
MINIMUM SPL @ 10 CM	92	dBA
RESONANT FREQUENCY	400 ± 100	Hz
TONE OR PULSE RATE	CONTINUOUS	0 pulse /sec
OPERATING TEMPERATURE	-20 ~ +60	°C
STORAGE TEMPERATURE	-30 ~ +70	°C
HOUSING MATERIAL	ABS	-
TERMINAL MATERIAL	LEAD WIRES	-
WEIGHT	11	grams

THIS DOCUMENT CONTAINS DATA PROPRIETARY TO PROJECTS UNLIMITED, INC. ANY USE OR REPRODUCTION, IN ANY FORM, WITHOUT PRIOR WRITTEN PERMISSION OF PROJECTS UNLIMITED, INC. IS PROHIBITED.
©2003, Projects Unlimited Inc.

REVISION HISTORY

LTR	DESCRIPTION	DATE	APPROVED
-	RELEASED FROM ENGINEERING	8/09/2006	
A	REVISED RESONANT FREQUENCY	1/29/2007	R.W.
B	REVISED TO INVENTOR 3-D DRAWING TEMPLATE	2/04/2008	B.R.

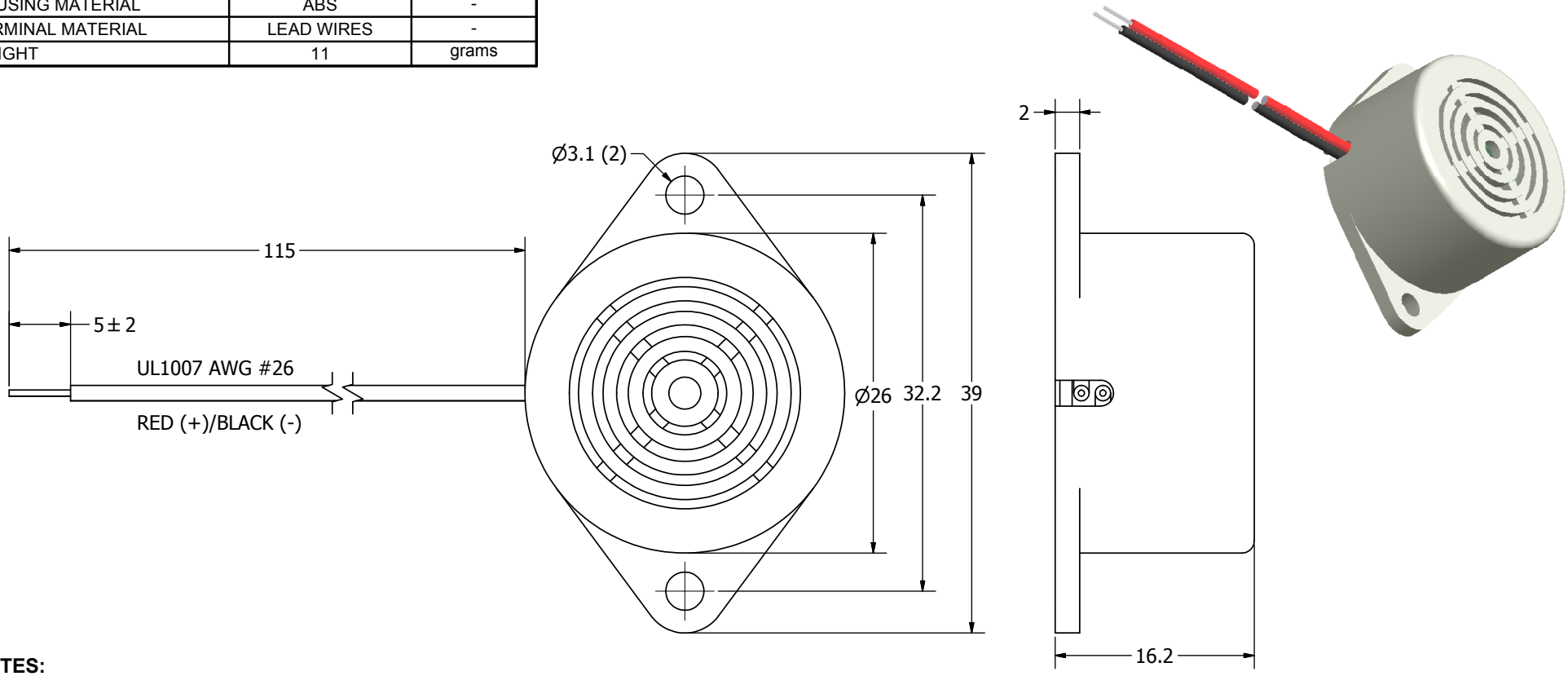

NOTES:

1. ALL DIMENSIONS ARE IN MILLIMETERS.
2. SPECIFICATIONS SUBJECT TO CHANGE OR WITHDRAWL WITHOUT NOTICE.
3. THIS PART IS RoHS 2002/95/EC COMPLIANT.

UNLESS OTHERWISE SPECIFIED:
DIMENSIONS ARE IN MILLIMETERS,
TOLERANCES ARE ±0.5 AND ANGLES ARE ±3°.

SIZE A3

AI-2604-TF-LW115-24V-R.idw

Designed by	Date	Checked by	Date	Approved by	Date	Drawn Date
J.D.	7/31/2006	E.P.	8/9/2006	B.R.	8/9/2006	2/4/2008

pui audio inc
a projects unlimited company

AI-2604-TF-LW115-24V-R

Indicator

Edition: -

Sheet: 1 / 1