SPECIFICATIONS		
PARAMETERS	VALUES	UNITS
RATED INPUT POWER	1	W
MAX INPUT POWER	1.5	W
IMPEDANCE	8 ± 15%	OHM
OUTPUT SPL @ 0.1W/0.1M (AT 0.8, 1.0, 1.2, 1.5 kHz)	91 ± 3	dBA
DISTORTION (MAX.)	5%	-
RESONANT FREQUENCY	500 ± 20%	Hz
FREQUENCY RANGE	500 ~ 4,500	Hz
HOUSING MATERIAL	METAL	-
CONE MATERIAL	MYLAR	-
MAGNET MATERIAL	N38	-
OPERATING TEMPERATURE	-20 ~ +60	°C
WEIGHT	12	grams

THIS DOCUMENT CONTAINS DATA PROPRIETARY TO PROJECTS UNLIMITED, INC. ANY USE OR REPRODUCTION, IN ANY FORM, WITHOUT PRIOR WRITTEN PERMISSION OF PROJECTS UNLIMITED, INC. IS PROHIBITED.
©2003, Projects Unlimited Inc.

REVISION HISTORY			
LTR	DESCRIPTION	DATE	APPROVED
-	RELEASED FROM ENGINEERING	1/02/2007	
A	REVISED DIMENSIONS	7/03/2007	D.F.
B	REVISED TO INVENTOR 3-D DRAWING TEMPLATE	12/04/2008	B.R.

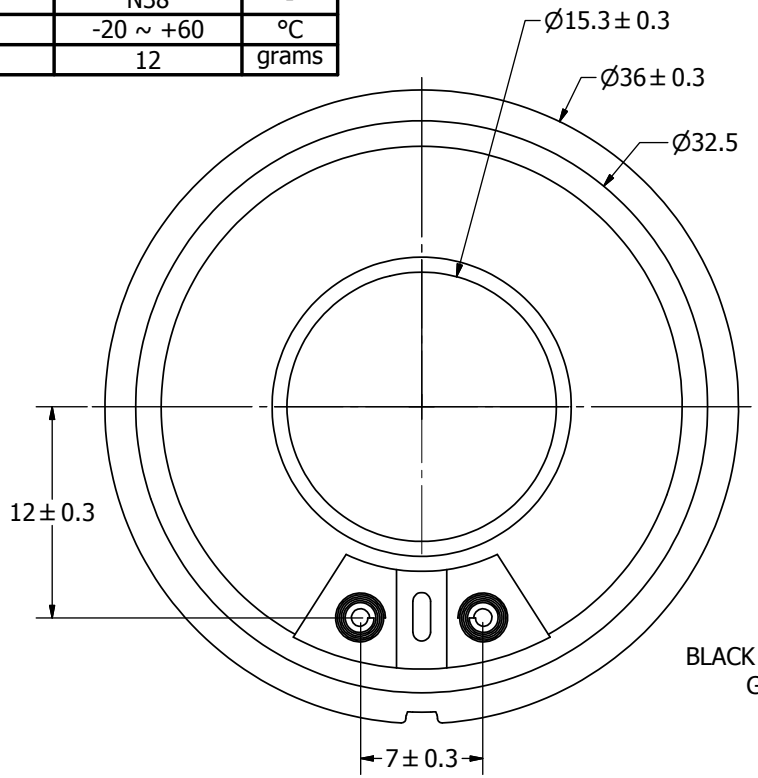

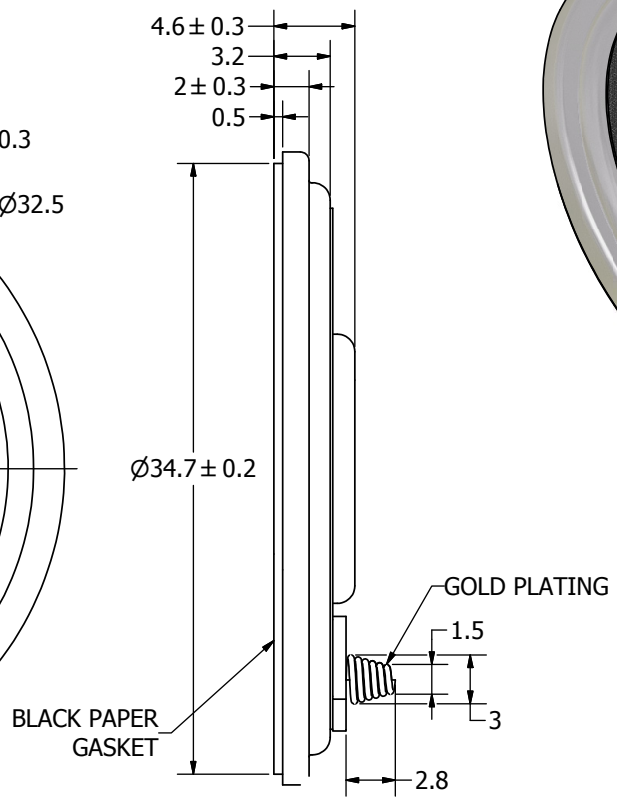

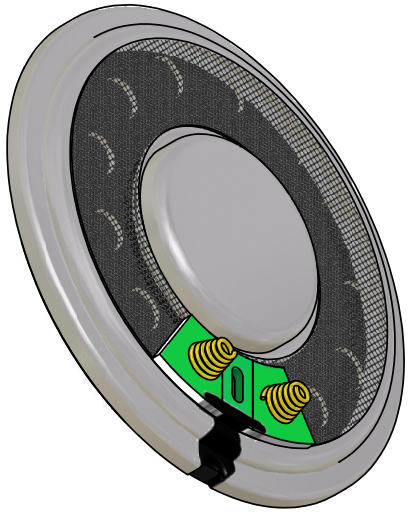

NOTES:

1. ALL DIMENSIONS ARE IN MILLIMETERS.
2. SPECIFICATIONS SUBJECT TO CHANGE OR WITHDRAWL WITHOUT NOTICE.
3. THIS PART IS RoHS 2002/95/EC COMPLIANT.

UNLESS OTHERWISE SPECIFIED: DIMENSIONS ARE IN MILLIMETERS, TOLERANCES ARE ±0.5 AND ANGLES ARE ±3°.	SIZE A3	Designed by	Date	Checked by	Date	Approved by	Date	Drawn Date
		J.D.	1/2/2007	D.F.	1/2/2007	R.W.	1/2/2007	12/4/2008
AS03608MR-SC-R.idw		pui audio A Division of Projects Unlimited		AS03608MR-SC-R				
				Speaker			Edition -	Sheet 1 / 1