SPECIFICATIONS		
PARAMETERS	VALUES	UNITS
RATED INPUT POWER	20	W
MAX INPUT POWER	30	W
IMPEDANCE	4 ± 15%	OHM
OUTPUT SPL @ 1W/1M (AT 1.0, 1.2, 1.5, 2.0 kHz)	86 ± 3	dBA
DISTORTION (MAX.)	7%	-
RESONANT FREQUENCY	90 ± 20%	Hz
FREQUENCY RANGE	90 ~ 10,000	Hz
HOUSING MATERIAL	METAL	-
CONE MATERIAL	TREATED PAPER	-
MAGNET MATERIAL	FERRITE	-
OPERATING TEMPERATURE	-10 ~ +55	°C
WEIGHT	567	grams

THIS DOCUMENT CONTAINS DATA PROPRIETARY TO PROJECTS UNLIMITED, INC. ANY USE OR REPRODUCTION, IN ANY FORM, WITHOUT PRIOR WRITTEN PERMISSION OF PROJECTS UNLIMITED, INC. IS PROHIBITED.
©2003, Projects Unlimited Inc.

REVISION HISTORY			
LTR	DESCRIPTION	DATE	APPROVED
-	RELEASED FROM ENGINEERING	9/25/2006	
A	REVISED TO INVENTOR 3-D DRAWING TEMPLATE	6/26/2008	B.R.

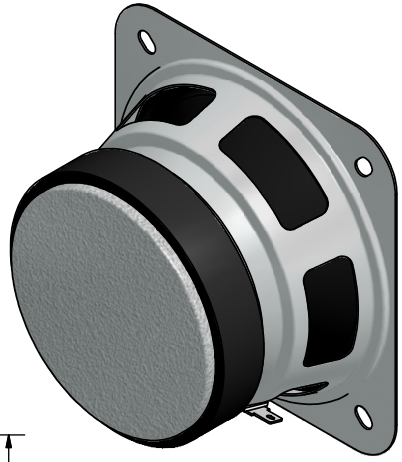

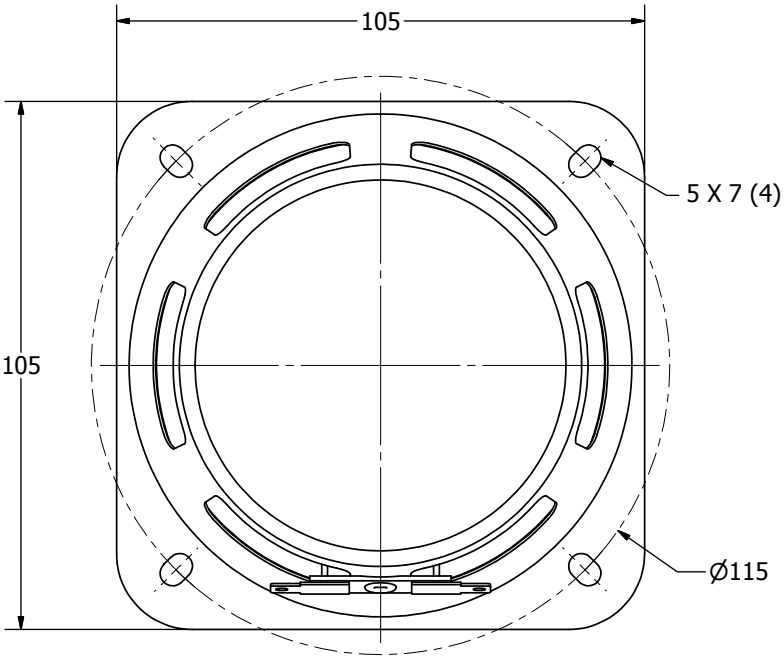

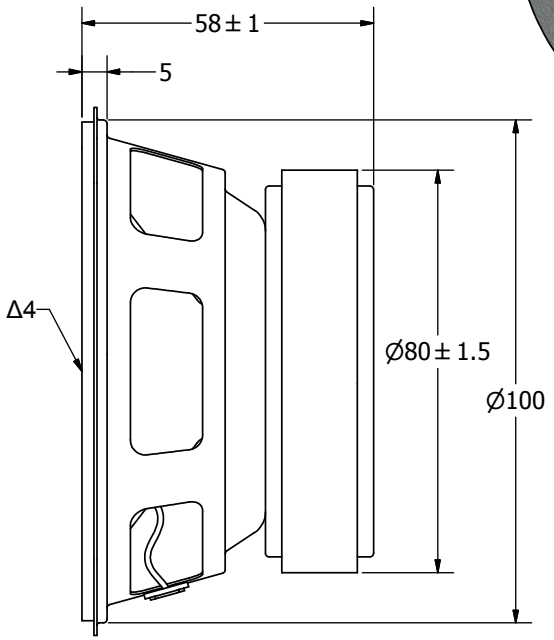

NOTES:

1. ALL DIMENSIONS ARE IN MILLIMETERS.
2. SPECIFICATIONS SUBJECT TO CHANGE OR WITHDRAWL WITHOUT NOTICE.
3. THIS PART IS RoHS 2002/95/EC COMPLIANT.

Δ4. CONE HAS BEEN TREATED FOR WATER RESISTANCE.

UNLESS OTHERWISE SPECIFIED: DIMENSIONS ARE IN MILLIMETERS, TOLERANCES ARE ±0.5 AND ANGLES ARE ±3°.	SIZE A3	Designed by	Date	Checked by	Date	Approved by	Date	Drawn Date
		J.D.	9/22/2006	B.R.	9/22/2006	R.W.	9/22/2006	6/26/2008
AS10004PS-WR-R.idw		pui audio A Division of Projects Unlimited		AS10004PS-WR-R				
				Speaker			Edition -	Sheet 1 / 1