SPECIFICATIONS

PARAMETERS	VALUES	UNITS
RATED VOLTAGE	32	Vdc
OPERATING VOLTAGE RANGE	3 ~ 32	Vdc
RATED CURRENT (MAX)	21	mA
MINIMUM SPL @ 10 CM	95	dBA
RESONANT FREQUENCY	2,800 ± 500	Hz
TONE OR PULSE RATE	FAST PULSE	3 pulse /sec
OPERATING TEMPERATURE	-30 ~ +80	°C
STORAGE TEMPERATURE	-40 ~ +80	°C
HOUSING MATERIAL	ABS	-
TERMINAL MATERIAL	Sn PLATED BRONZE	-
WEIGHT	18.5	grams

THIS DOCUMENT CONTAINS DATA PROPRIETARY TO PROJECTS UNLIMITED, INC. ANY USE OR REPRODUCTION, IN ANY FORM, WITHOUT PRIOR WRITTEN PERMISSION OF PROJECTS UNLIMITED, INC. IS PROHIBITED.
©2003, Projects Unlimited Inc.

REVISION HISTORY

LTR	DESCRIPTION	DATE	APPROVED
-	RELEASED FROM ENGINEERING	5/17/2006	
A	REVISED TO INVENTOR 3-D DRAWING TEMPLATE	6/1/2010	B.R.

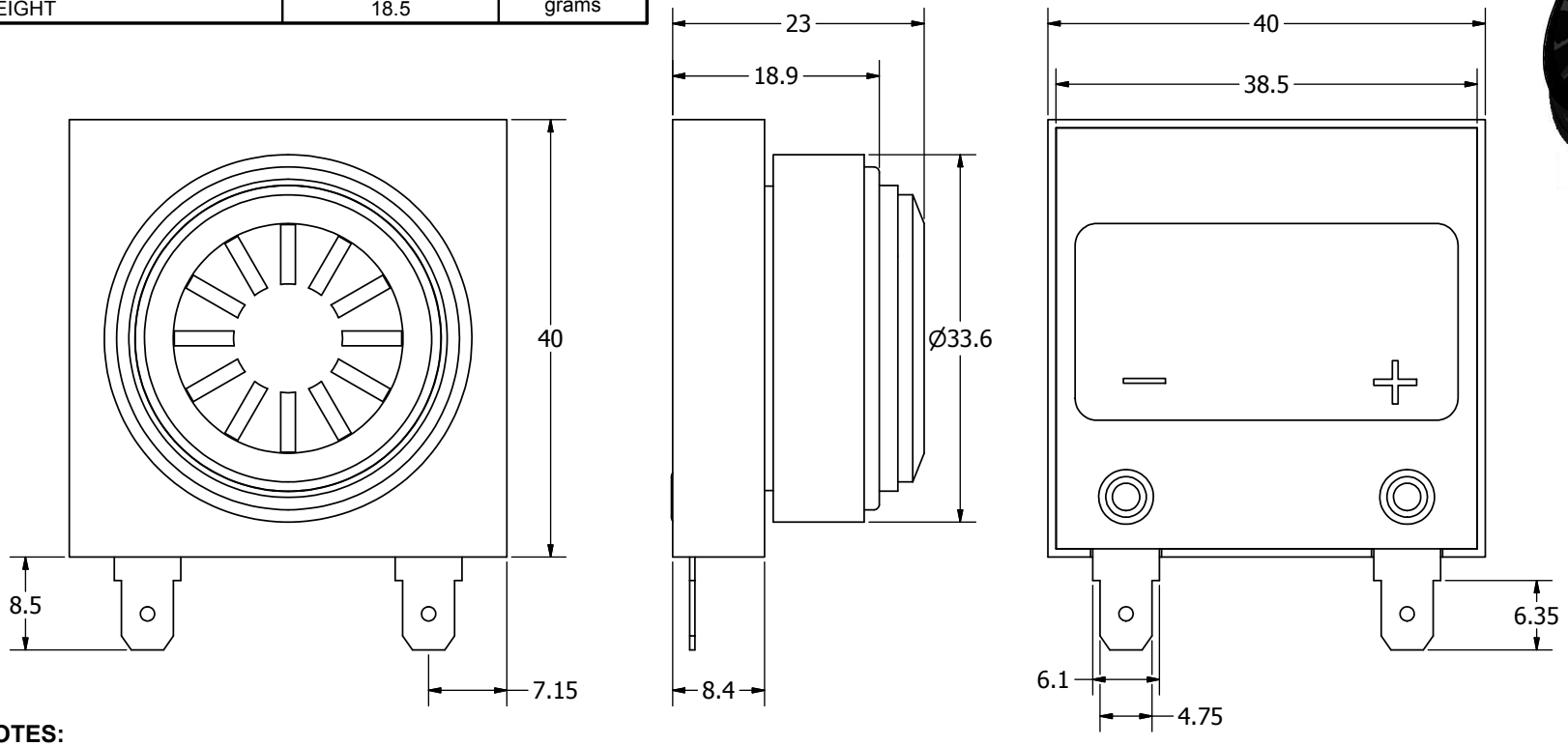

NOTES:

1. ALL DIMENSIONS ARE IN MILLIMETERS.
2. SPECIFICATIONS SUBJECT TO CHANGE OR WITHDRAWL WITHOUT NOTICE.
3. THIS PART IS RoHS 2002/95/EC COMPLIANT.

UNLESS OTHERWISE SPECIFIED:
DIMENSIONS ARE IN MILLIMETERS,
TOLERANCES ARE ±0.5 AND ANGLES ARE ±3°.

SIZE A3

X-4035-P-FP32-R.idw

Designed by	Date	Checked by	Date	Approved by	Date	Drawn Date
J.D.	5/17/2006	E.P.	5/17/2006	B.R.	5/17/2006	6/1/2010

pui audio inc
a projects unlimited company

X-4035-P-FP32-R

Indicator

Edition: -

Sheet: 1 / 1