Materials
1. Insulator, POM, yellow
2. Insulator, PBT, black
3. Center contact, C5191 phosphor bronze, 2 µm nickel plated
4. Shell, C3604 brass, 2 µm nickel plated

Electrical requirements
Dielectric strength: 1 min @ 500 Vac
Insulation resistance: 100 MΩ @ 500 Vdc
Contact resistance: 30 mΩ or less
Rated voltage: 20 Vdc
Rated current: 4 A

Mechanical requirements
Insertion force: 0.5-2 kgf
Withdrawal force: 0.3-1.5 kgf
Durability: 5000 mating cycles while maintaining; 0.4-2 kgf insertion force, 0.2-1.5 kgf withdrawal force and a less than 100 mΩ contact resistance.

Environmental requirements
Damp test: 40 °C, RH 90-100% for 96 hrs. Cool to ambient and recover for 2 hours. Maintain dielectric strength of 500 Vac for 1 min, insulation resistance of 50 MΩ @ 500 Vdc minimum and a contact resistance of 100 mΩ or less.

Dry test: 70 °C, RH 70-85% for 96 hrs. Cool to ambient and recover for 2 hours. Maintain insulation resistance of 50 MΩ @ 500 Vdc minimum and a contact resistance of 100 mΩ or less.

Salt spray test: 35 °C, RH 90-95%, 5% NaCl mist for 24 hrs. Wash parts after test. Maintain mechanical requirements and a contact resistance of less than 80 mΩ.

Operating range
-25 to 70 °C, relative humidity of 85% or less

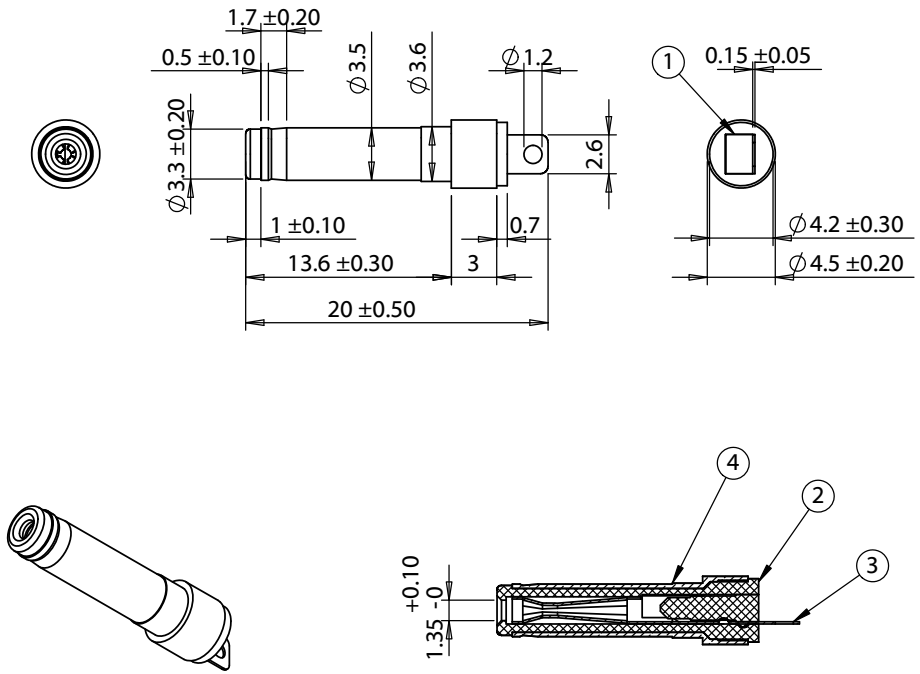

Revision	Date	Description
A	10/21/2009	Initial release
A1	11/9/2012	Added test data

Notes

RoHS compliant

Function test: no open, no short circuit, no INT

TENSILITY

20802 Sockeye Place #130
Bend, OR 97701 USA
tel **541.323.3228** *fax* **541.323.4202**
800 **877.670.7118** **www.tensility.com**

DIMENSIONS ARE IN MILLIMETERS

TOLERANCES:
X: ± 0.5 mm
X.X: ± 0.3 mm
X.XX: ± 0.05 mm

DESCRIPTION:
Connector, dc plug, 3.5x1.35xL20mm, molding style, spring contacts

SIZE	Part number	
A	**50-00056**	
SCALE: 2:1	WEIGHT:	SHEET 1 OF 1

5 4 3 2 1