5300 Series T-1 3/4 Right Angle LED Assembly

Description and Features

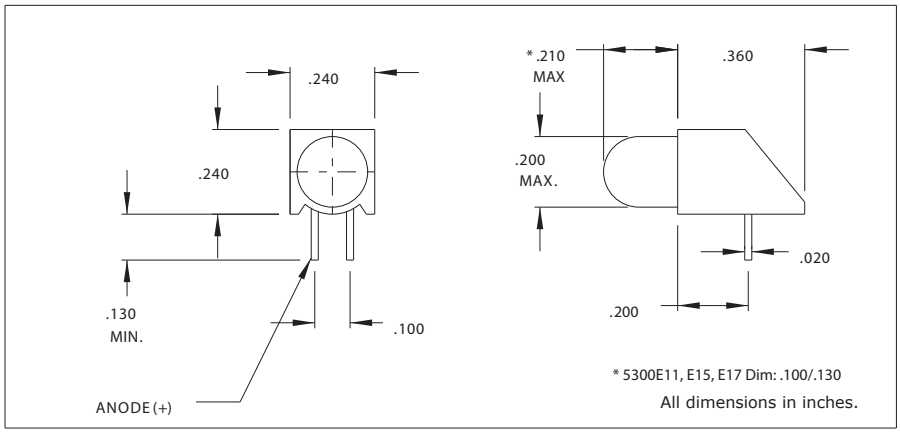

Features

- Block mounting height and spacing alignment saves assembly cost and time.
- Full range of brightness.
- Available with built-in resistor chip to eliminate the need for external resistor, operates off 5V or 12V supply.
- TTL compatible
- Standoffs prevent flux entrapment.

Housing: Black Nylon, UL94V-O

Alternate LEDs are also available in this package as a standard variation.

Electro-Optical Characteristics and Ratings

Part Number	Color	Typ. Intensity (mcd)	Rated Current (mA)	Continuous Forward Current Max. (mA)	Forward Voltage Typ. (V)	Forward Voltage Max. (V)	Peak Forward Current @ 1ms-300pps (A)	Reverse Break-down Voltage Min. (V)	Peak Wavelength (nm)
5300E11	Red	6.5	10	20	2.0	3.0	60	3	650
5300E15	Green	10	10	25	3.1	3.0	60	3	563
5300E17	Yellow	6.3	10	20	2.1	3.0	60	3	585
5300H1	Red	6.3	10	60	2.0	3.0	1.0	5	650
5300H3	Amber	10	10	60	2.0	3.0	1.0	5	608
5300H5	Green	10	10	60	2.2	3.0	.09	5	563
5300H6	Blue	160	20	20	5.0	6.0	-	5	430
5300H7	Yellow	6.3	10	60	2.1	3.0	1.0	5	585
5308H1	Red	68	20	60	2.1	3.0	1.0	5	650
5308H5	Green	100	20	60	2.2	3.0	.09	5	563
5308H7	Yellow	160	20	60	2.2	3.0	1.0	5	585
5300H1LC	Red	2.3	2	7	1.8	2.2	.007	5	635
5300H5LC	Green	2.3	2	7	1.8	2.2	.007	5	565
5300H7LC	Yellow	2.1	2	7	1.9	2.7	.007	5	585
5302H1-5V	Red	8	10	15	5	7.5	-	5	635
5302H3-5V	Amber	8	10	15	5	7.5	-	5	583
5302H5-5V	Green	8	12	15	5	7.5	-	5	565
5302H1-12V	Red	8	12	20	12.0	15.0	-	5	635
5302H3-12V	Amber	8	12	20	12.0	15.0	-	5	583
5302H5-12V	Green	8	12	20	12.0	15.0	-	5	565

CML and Chicago Miniature Lamp are registered trademarks of Visual Communications Company, LLC.