EC3AB

S E R I E S

3 WATT EN55022 CLASS B DC-DC CONVERTERS

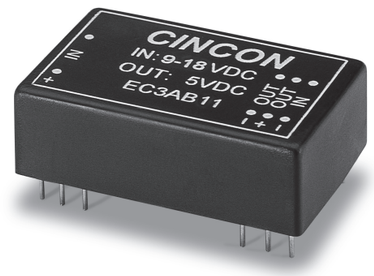

E176177 H/HM Versions Only

Features

- 3W Isolated Output
- DIP-24 / SMD Package
- Regulated Outputs
- Efficiency to 80%
- Meets EN55022 Class B, Conducted
- Pi Input Filter
- Continuous Short Circuit Protection
- Remote On/Off Control (Option)

MODEL NUMBER	INPUT VOLTAGE	OUTPUT VOLTAGE	OUTPUT CURRENT	INPUT CURRENT		% EFF.	CASE
				NO LOAD	FULL LOAD		
EC3AB11		5 VDC	600 mA	7.5 mA	329 mA	76	
EC3AB12		12 VDC	250 mA	7.5 mA	316 mA	79	
EC3AB13		15 VDC	200 mA	7.5 mA	321 mA	78	
EC3AB14	9-18 VDC	±5 VDC	±300 mA	12 mA	329 mA	76	DIP-24
EC3AB15		±12 VDC	±125 mA	12 mA	325 mA	77	
EC3AB16		±15 VDC	±100 mA	12 mA	329 mA	76	
EC3AB17		3.3 VDC	600 mA	7.5 mA	229 mA	72	
EC3AB21		5 VDC	600 mA	5 mA	162 mA	77	
EC3AB22		12 VDC	250 mA	5 mA	156 mA	80	
EC3AB23		15 VDC	200 mA	5 mA	156 mA	80	
EC3AB24	18-36 VDC	±5 VDC	±300 mA	7.5 mA	164 mA	76	DIP-24
EC3AB25		±12 VDC	±125 mA	7.5 mA	156 mA	80	
EC3AB26		±15 VDC	±100 mA	7.5 mA	162 mA	77	
EC3AB27		3.3 VDC	600 mA	5 mA	111 mA	74	
EC3AB31		5 VDC	600 mA	2 mA	81 mA	77	
EC3AB32		12 VDC	250 mA	2 mA	81 mA	77	
EC3AB33		15 VDC	200 mA	2 mA	81 mA	77	
EC3AB34	36-72 VDC	±5 VDC	±300 mA	3 mA	80 mA	78	DIP-24
EC3AB35		±12 VDC	±125 mA	3 mA	82 mA	76	
EC3AB36		±15 VDC	±100 mA	3 mA	82 mA	76	
EC3AB37		3.3 VDC	600 mA	3 mA	58 mA	71	

NOTE: 1. Nominal Input Voltage 12, 24 or 48 VDC

Specifications

INPUT SPECIFICATIONS:

Input Voltage Range.....12V.....9-18V
24V.....18-36V
48V.....36-72V
Positive Logic Remote ON/OFF (see note 6)
Input Filter.....Pi Type

OUTPUT SPECIFICATIONS:

Voltage Accuracy.....±2.0% max.
Voltage Balance (Dual).....±1.0% max.
Temperature Coefficient.....±0.05%/˚C
Ripple and Noise, 20MHz BW.....3.3V/5V.....100mV p-p max.
12V/15V.....1% p-p max.
Short Circuit Protection.....Continuous
Line Regulation, Single/Dual[1].....± 0.5% max.
Load Regulation, Single[2].....± 0.5% max.
Dual[3].....± 1.0% max.

GENERAL SPECIFICATIONS:

Efficiency.....See Table
Isolation Resistance.....10.⁹ohms
Switching Frequency.....100KHz, min
Operating Ambient Temperature Range .....-25˚C to +71˚C
De-rating, Above 71˚C(Plastic Case).....Linearly to Zero power at 95˚C
De-rating, Above 71˚C (Copper Case)....Linearly to Zero power at 100˚C
Case Temperature (Plastic case[8]) .....95˚C max
(Copper case[8]) .....100˚C max
Cooling ..... Natural Convection
Storage Temperature Range.....-40°C to + 100°C
EMI / RFI.....Conductive EMI Meet EN55022 Class B
Dimensions.....DIP.....1.25 x 0.80 x 0.50 inches(31.8 x 20.3 x 12.7mm)
SMD.....1.25 x 0.80 x 0.55 inches(31.8 x 20.3 x 14.0mm)
Weight.....15g

ISOLATION VOLTAGE:

500 VDC min.....Standard Models
3K VDC min[4].....Suffix "H" Models
1.5K VDC min.....Suffix "HM" Models

CASE MATERIAL:

Standard Models ..... Non-Conductive Black Plastic
Suffix "M" Models[5].....Black Coated Copper with Non-Conductive Base

NOTE:

1. Measured From High Line to Low Line
2. Measured From Full Load to 10% Load
3. Measured From Full Load to 1/4 Load
4. Non-Conductive Black Plastic Only
5. Suffix "T" to the Model Number with Remote On/Off for "H"/"HM" Versions Only
6. Logic Compatibility....CMOS or Open Collector TTL, ref. to-Vin
   Module ON .....>5.5Vdc or Open Circuit
   Modeule OFF.....<1,8Vdc.
   Shutdown Idle.....10mA
   Control Common.....Referenced to Input Minus
7. Suffix "S" to the Model Number with SMD Packages
8. Maximum case temperature under any operating condition should not exceed 95˚C (Plastic Case),100˚C (Copper Case).

EC3AB Series Derating Curve

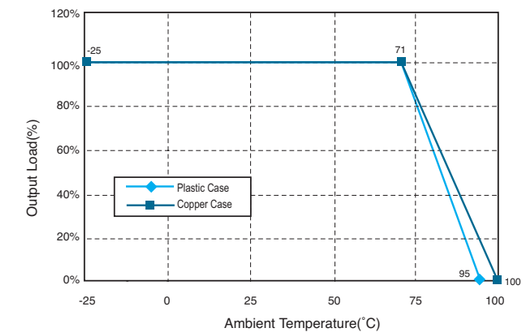

PIN CONNECTION

500 VDC					1.5K & 3K VDC				
Pin	Single Output		Dual Output		Pin	Single Output		Dual Output	
	DIP	SMD	DIP	SMD		DIP	SMD	DIP	SMD
1,24	+V Input		+V Input		1,24	NP	NC	NP	NC
2,23	NC		-V Output		2,3	-V Input		-V Input	
3,22	NC		Common		4	NP	NC	NP	NC
4	NP	NC	NP	NC	5	NP/ Remote On/Off	NC/ Remote On/Off	NP/ Remote On/Off	NC/ Remote On/Off
5	NP	NC	NP	NC	9	NC		Common	
9	NP	NC	NP	NC	10,15	NC		NC	
10,15	-V Output		Common		11	NC		-V Output	
11,14	+V Output		+V Output		12,13	NP	NC	NP	NC
12,13	-V Input		-V Input		14	+V Output		+V Output	
16	NP	NC	NP	NC	16	-V Output		Common	
20	NP	NC	NP	NC	20,21	NP	NC	NP	NC
21	NP	NC	NP	NC	22,23	+V Input		+V Input	

*NP-NO PIN *Remote On/Off (Option)

*NC-NO CONNECTION WITH PIN

CASE A

NOTE:Pin Size is 0.02" Inch (0.5mm) DIA
All Dimensions In Inches(mm)
Tolerance Inches: .xx= ±.02, .xxx= ±.010
Millimeters: .x= ±.5, .xx= ±.25

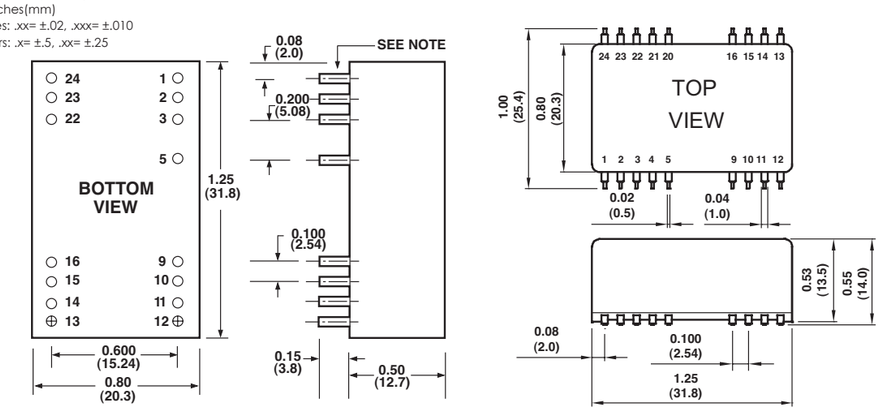

All Specifications Typical At Nominal Line, Full Load and 25˚C Unless Otherwise Noted.