60x60x15 mm

3.5~5.2 CFM

Specifications

MAGLev by SUNON		Bearing	Rating Voltage	Power Current	Power Consumption	Speed	Air Flow	Static Pressure	Noise	Weight	Curve
		● VAPO	(VDC)	(mA)	(WATTS)	(RPM)	(CFM)	(Inch-H_2O)	(dB(A))	(g)	
GB1206PHV1-AY	GN	●	12	105	1.30	4800	5.2	0.44	40.5	45.0	1
GB1206PHV2-AY	GN	●	12	70	0.80	4200	4.7	0.32	36.0	45.0	2
GB1206PHV3-AY	GN	●	12	40	0.50	3200	3.5	0.18	29.0	45.0	3

Air Flow-Static Pressure Characteristics

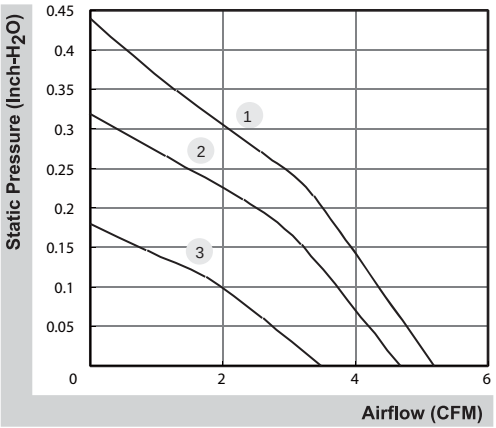

External dimensions(mm)

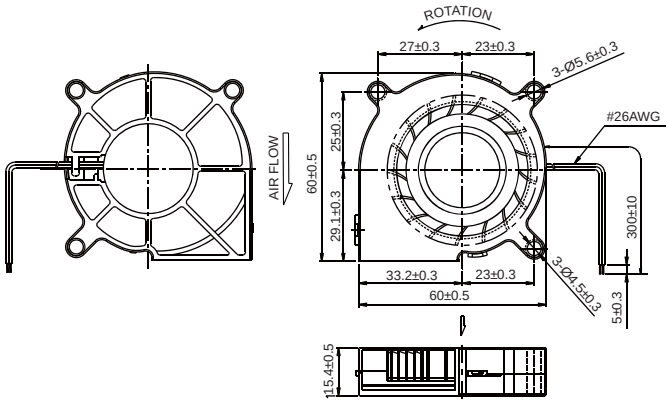

*All model could be customized. Please contact with Sunon Sales.
*Specifications are subject to change without notice. Please Visit SUNON website at http://www.sunon.com for update information.