THE INFORMATION CONTAINED IN THIS DRAWING IS THE SOLE PROPERTY OF BUD INDUSTRIES INC. ANY REPRODUCTION IN PART OR WHOLE WITHOUT THE WRITTEN PERMISSION OF BUD INDUSTRIES INC. IS PROHIBITED.

DWG. NO.	CN-5709
ISSUE	REVISIONS

MATERIAL - ALUMINUM ALLOY # ADC-12

FINISH - NATURAL (CONTACT BUD FACTORY FOR ALTERNATE FINISHES)

GASKET - RATED IP65 NEOPRENE, SELF-ADHESIVE, 3mm THICK, COLOR BLACK

SCREWS - STAINLESS STEEL, M3.5 x 12mm LG., CSK HEAD, SELF-THREADING

ALL HOLE DIAMETERS HAVE ±.005 TOLERANCE.

ALL OTHER DIMENSIONS HAVE ±.015 TOLERANCE.

ENCLOSURES ARE SHIPPED UNASSEMBLED WITH ALL ITEMS SHOWN.

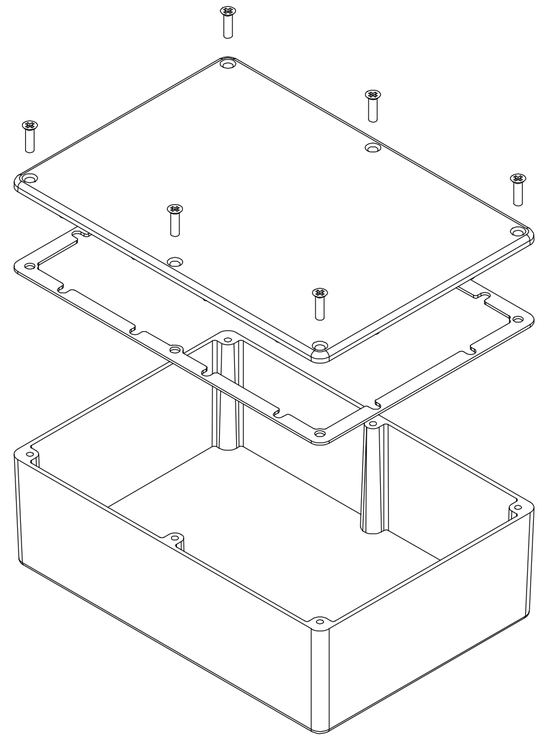

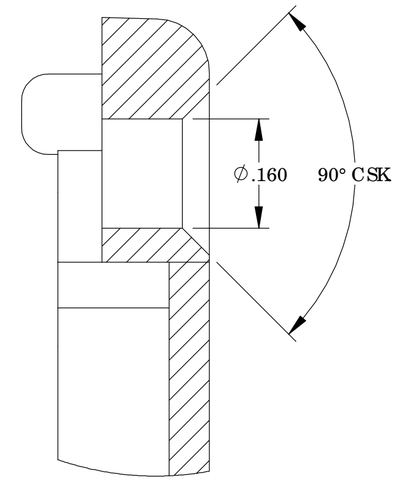

DETAIL D
SCALE 6 : 1

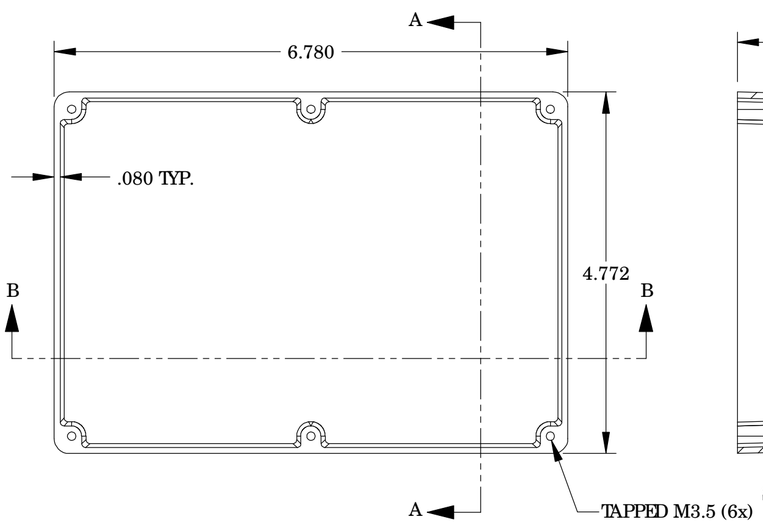

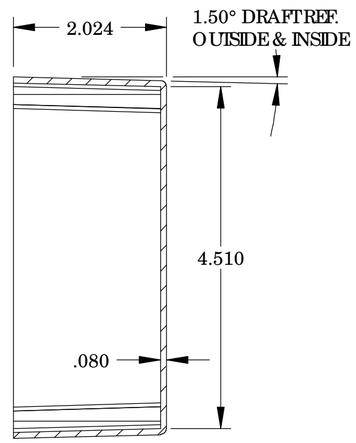

SECTION A-A

BODY

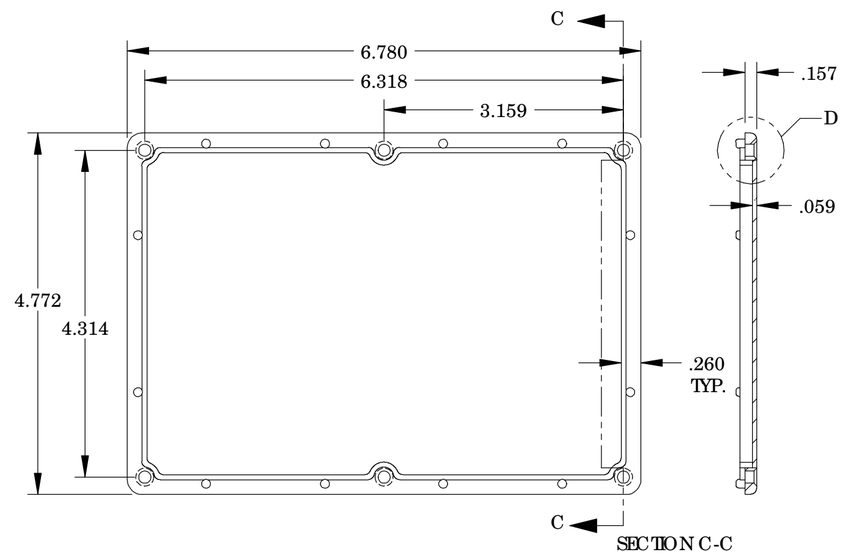

SECTION C-C

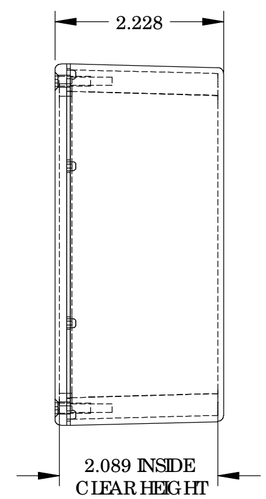

COVER

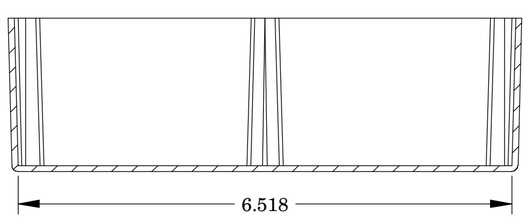

SECTION B-B

QTY.	USED ON

PARTS LIST

+/-.005 BETWEEN HOLE CENTERS +/-.015 FROM SHEARED EDGE +/-.032 FROM A BENT SURFACE +/-.062 BETWEEN ASSEMBLED SURFACES UNLESS OTHERWISE SPECIFIED	CAD GENERATED DRAWING, DO NOT MANUALLY UPDATE	APPROVALS	DATE
	DRAWN	DAB	3-31-06
MATERIAL AS NOTED	CHECKED		
FINISH AS NOTED	APPROVED		
DO NOT SCALE DRAWING			

BUD INDUSTRIES INC.

DIE CAST ALUMINUM ENCLOSURE

SIZE	DWG. NO.	REV.
C	CN-5709	
SCALE	CAD FILE	SHEET 1 OF 1