PART NAME	IP67 SERIES NEMA DIE CAST ALUMINUM BOX	PART No.	IPS-3927	REVISION DATE	1/21/2011

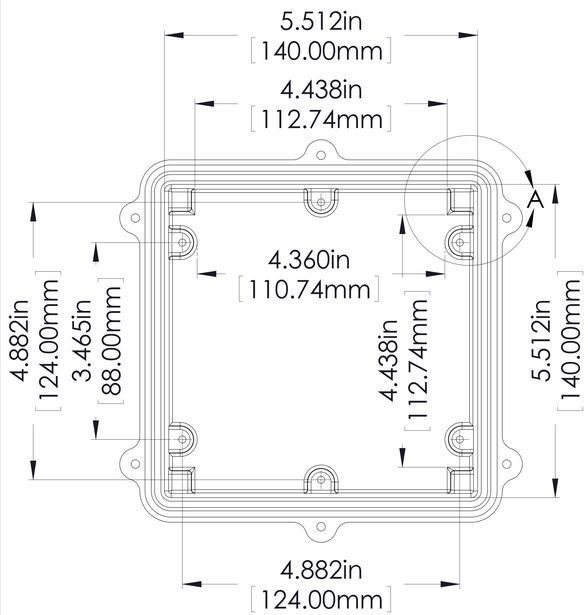

INSIDE BODY DETAILS

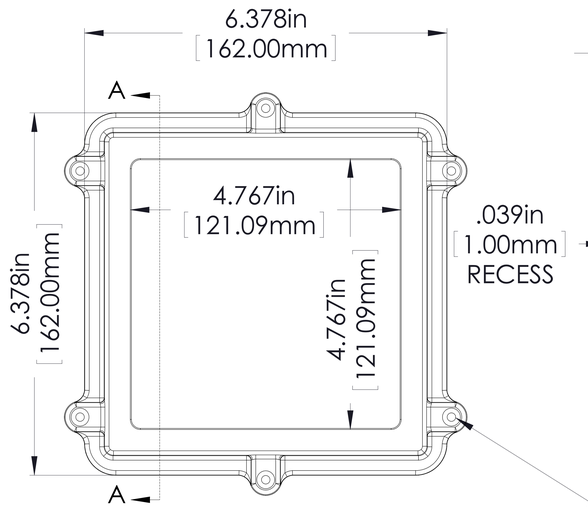

TOP VIEW

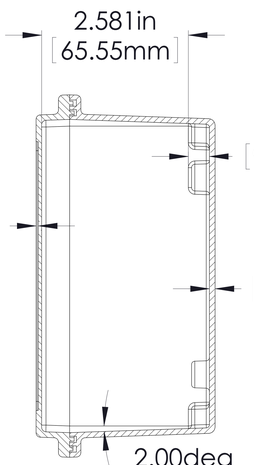

SECTION A-A

SIX (6) M4x0.7 PITCH
x 20mm (.787in.) LG.
FLAT HEAD SCREWS.

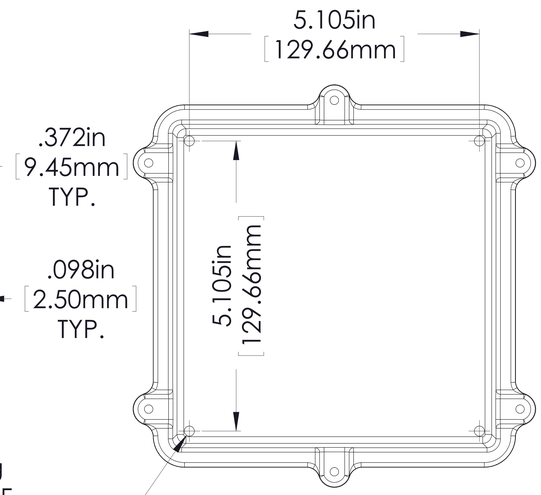

BOTTOM VIEW

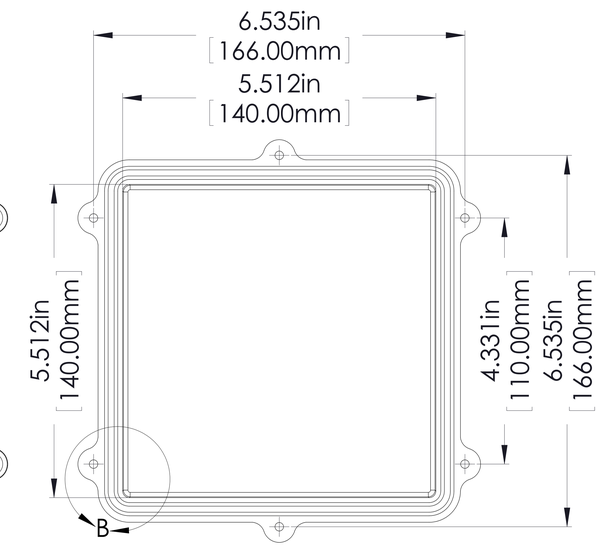

INSIDE COVER DETAILS

∅.177in
[4.50mm]
x 7.5mm (.295in.) DP. (4x)
[ACCEPTS M5 x 10mm (.394in.) LG.
SELF-TAPPING SCREWS.
(NOT SUPPLIED)

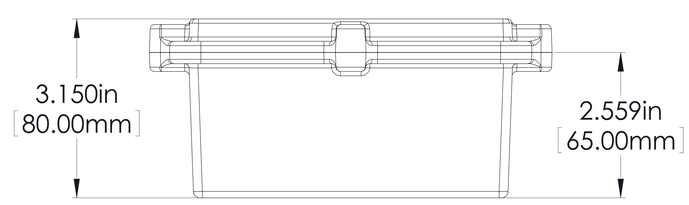

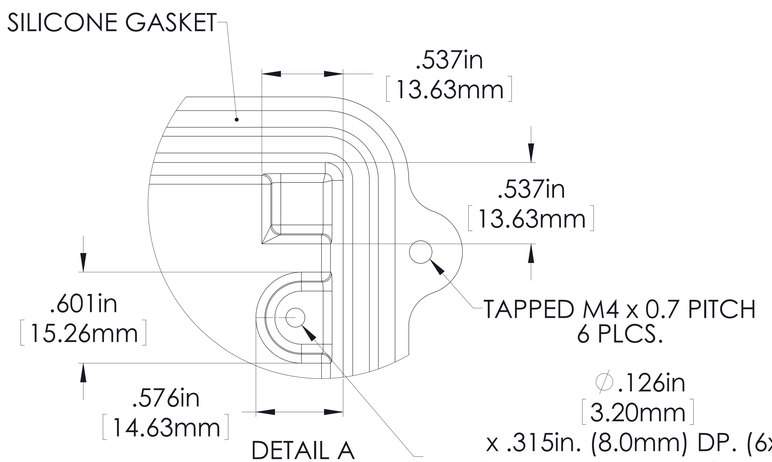

DETAIL A
SCALE 4 : 1

∅.126in
[3.20mm]
x .315in. (8.0mm) DP. (6x)
[ACCEPTS M3.5 x 6mm (.236in.) LG.
SELF-TAPPING SCREWS
(NOT SUPPLIED)]

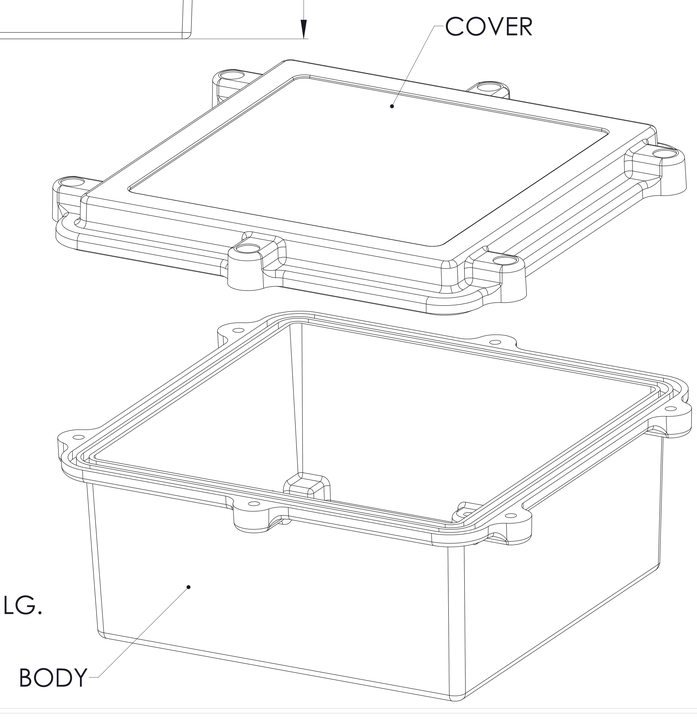

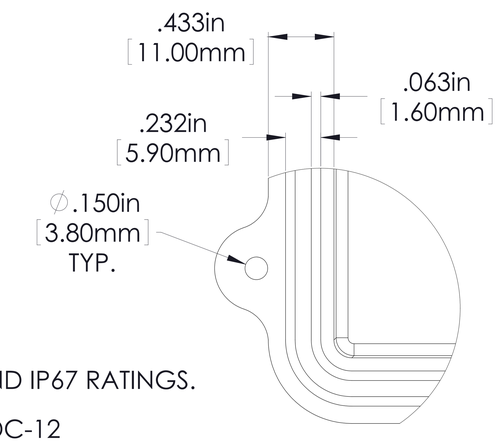

DETAIL B
SCALE 4 : 1

MEETS NEMA 1, 2, 4, 4X, 12, 13 AND IP67 RATINGS.

MATERIAL: ALUMINUM ALLOY ADC-12

FINISH: NATURAL

TOLERANCES: ALL HOLE DIAMETERS: ±.005in (.13mm)
ALL OTHER DIMENSIONS: ±.015in (.38mm)