BUD	PART NAME	NEMA DIE CAST BOX WITH EMI/RFI SHIELDING	PART No.	ANS-3803 ANS-3803-B	REVISION DATE	8-22-13

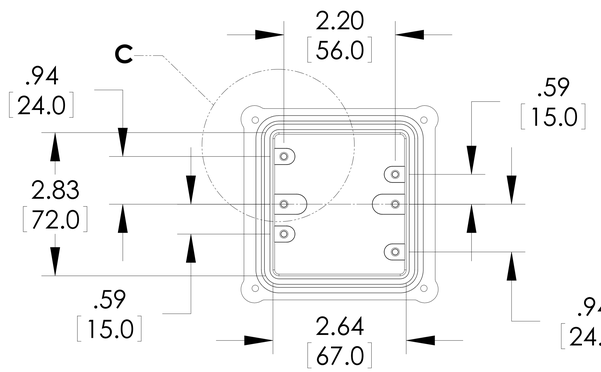

INSIDE BODY DETAILS

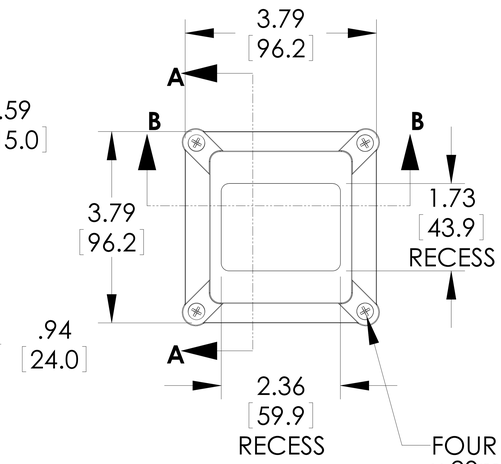

TOP VIEW

FOUR (4) M4x0.7 PITCH
x 20mm (.787") LG.
STAINLESS STEEL FLAT HEAD
CAPTIVE SCREWS

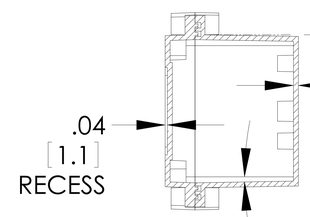

SECTION A-A

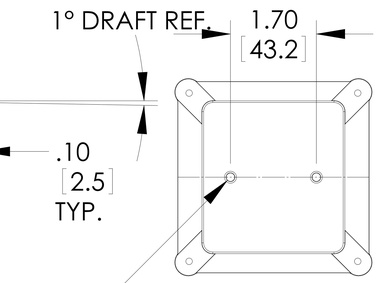

BOTTOM VIEW

∅.176 x .315[8.00] DEEP BLIND HOLE (2X)
[4.47]
{ACCEPTS M5 x 10mm (.394") LG.
SELF-TAPPING SCREWS (NOT SUPPLIED)}

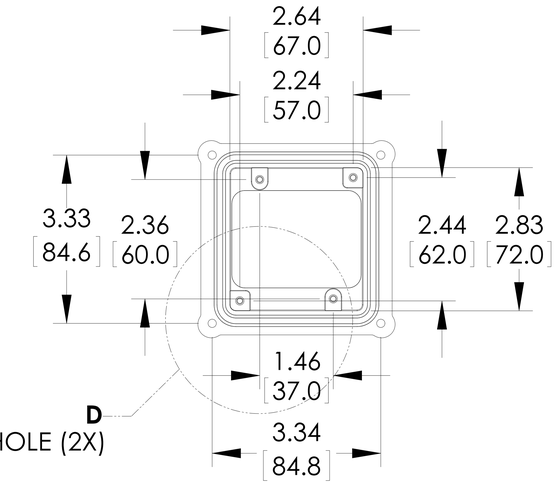

INSIDE COVER DETAILS

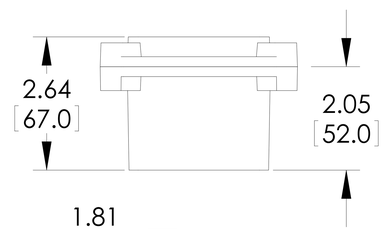

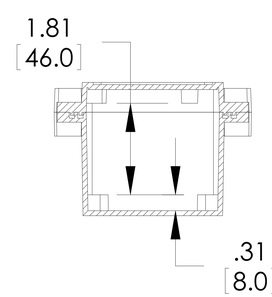

SECTION B-B

MEETS NEMA 1, 2, 4, 4X, 12, 13 AND IP67 RATINGS

MATERIAL - ALUMINUM ALLOY ADC-12

FINISH - NATURAL (NO SUFFIX PART NO.)
- SMOOTH BLACK (-B SUFFIX PART NO.)

TOLERANCES: ALL HOLE DIAMETERS ±.005[±.13]
ALL OTHER DIMENSIONS ±.02[±.4]

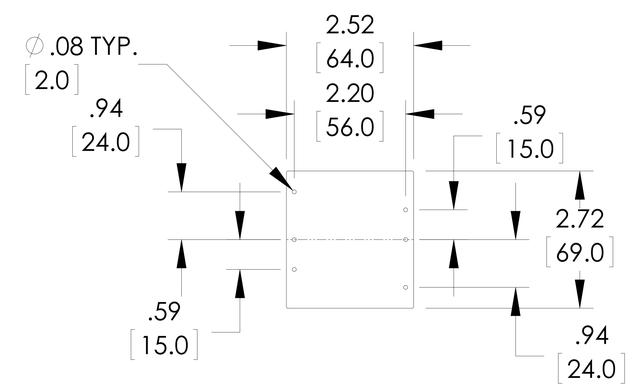

SUGGESTED PC BOARD OR
INTERNAL PANEL LAYOUT

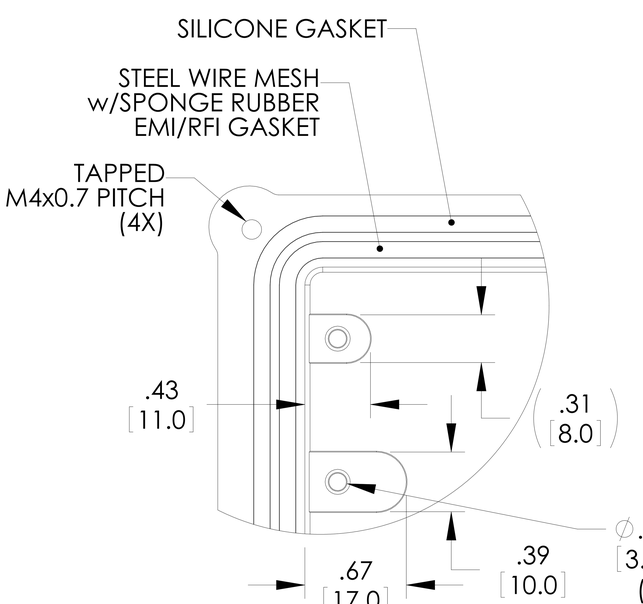

DETAIL C
SCALE 4 : 1

∅.125 x .315[8.00] DEEP BLIND HOLE
[3.18]
(6X) IN BODY, (4X) IN COVER
{ACCEPTS M3.5 x 6mm (.236") LG.
SELF-TAPPING SCREWS (NOT SUPPLIED)}

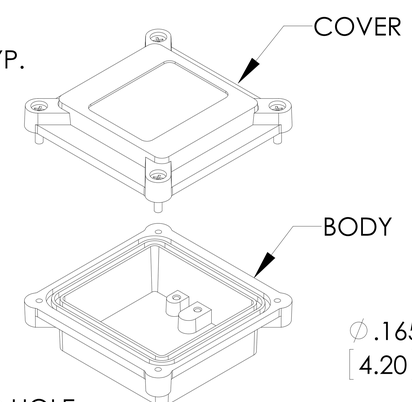

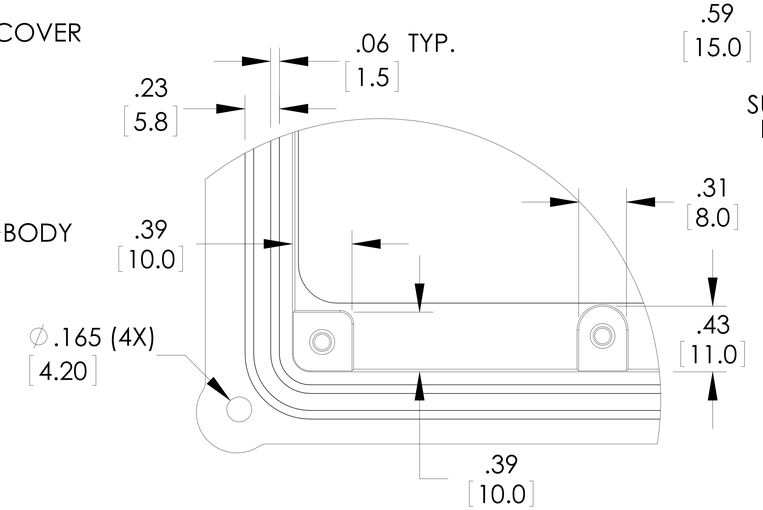

DETAIL D
SCALE 4 : 1