PART NAME	NEMA DIE CAST BOX WITH EMI/RFI SHIELDING	PART No.	ANS-3819 ANS-3819-B	REVISION DATE	8-22-13

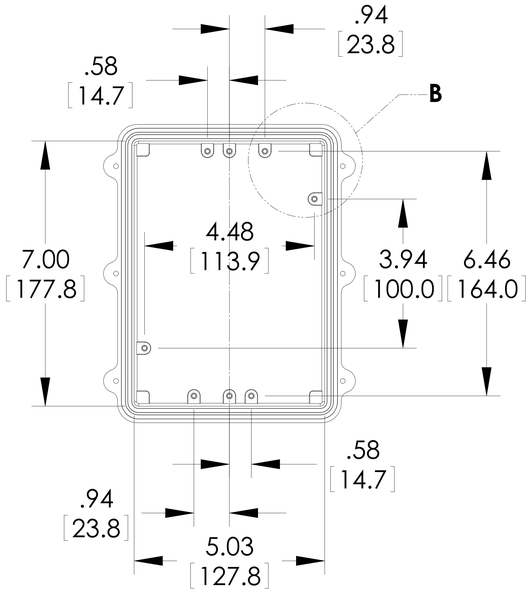

INSIDE BODY DETAILS

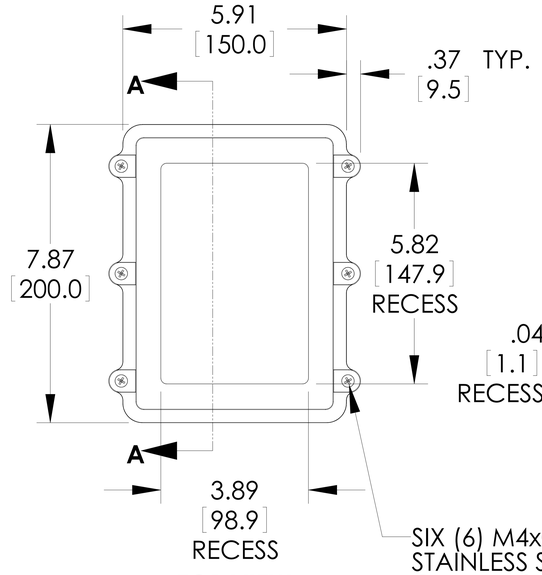

TOP VIEW

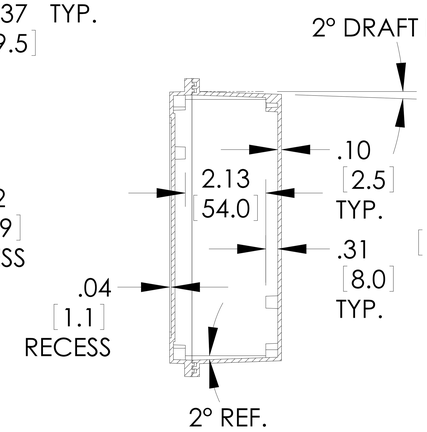

SECTION A-A

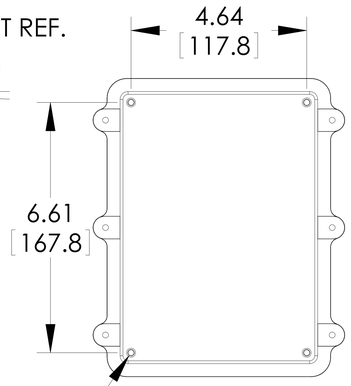

BOTTOM VIEW

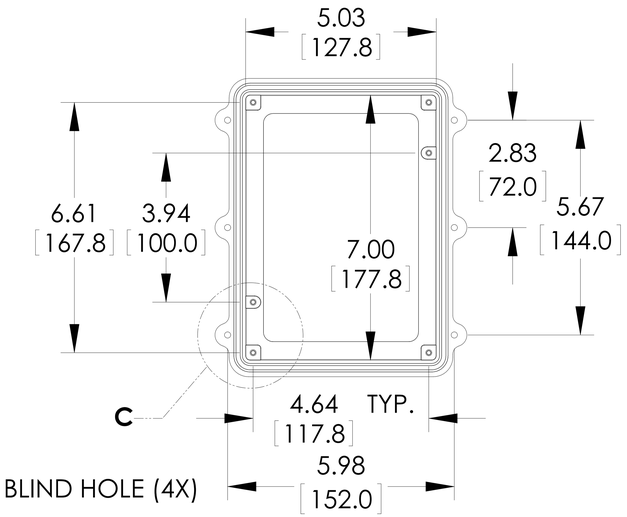

INSIDE COVER DETAILS

SIX (6) M4x0.7 PITCH x 20mm (.787") LG.
STAINLESS STEEL FLAT HEAD
CAPTIVE SCREWS

∅.175 x .315[8.00] DEEP BLIND HOLE (4X)
[4.45]
{ACCEPTS M5 x 10mm (.394") LG.
SELF-TAPPING SCREWS (NOT SUPPLIED)}

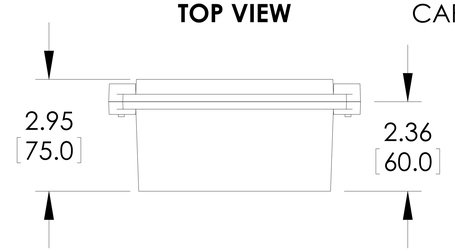

MEETS NEMA 1, 2, 4, 4X, 12, 13 AND IP67 RATINGS

MATERIAL - ALUMINUM ALLOY ADC-12

FINISH - NATURAL (NO SUFFIX PART NO.)
- SMOOTH BLACK (-B SUFFIX PART NO.)

TOLERANCES: ALL HOLE DIAMETERS ±.005[±.13]
ALL OTHER DIMENSIONS ±.02[±.4]

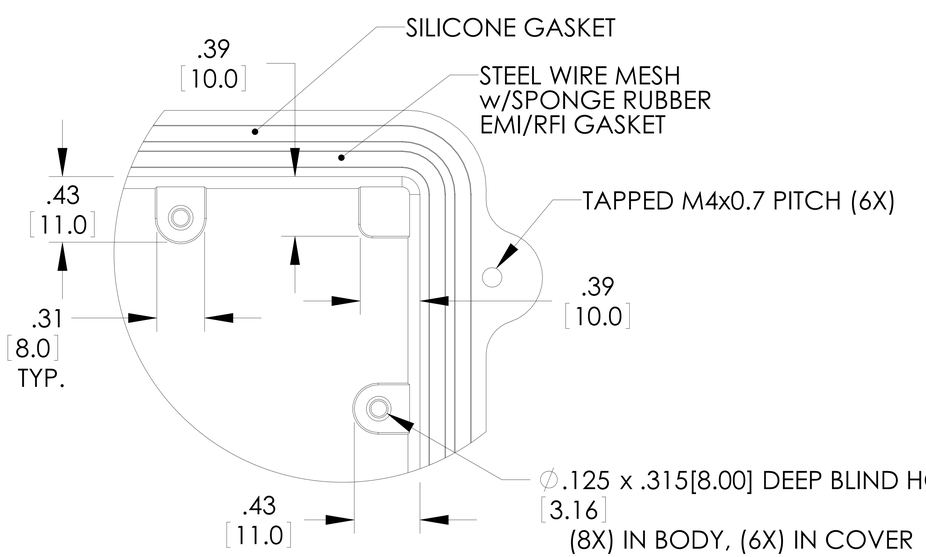

∅.125 x .315[8.00] DEEP BLIND HOLE
[3.16]
(8X) IN BODY, (6X) IN COVER
{ACCEPTS M3.5 x 6mm (.236") LG.
SELF-TAPPING SCREWS (NOT SUPPLIED)}

DETAIL B
SCALE 4 : 1

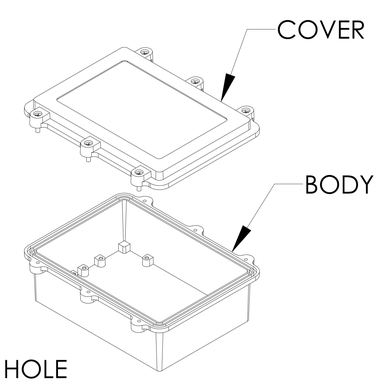

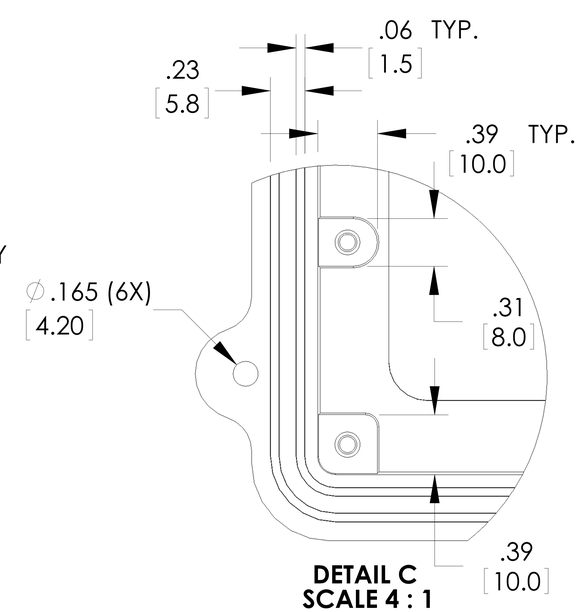

DETAIL C
SCALE 4 : 1

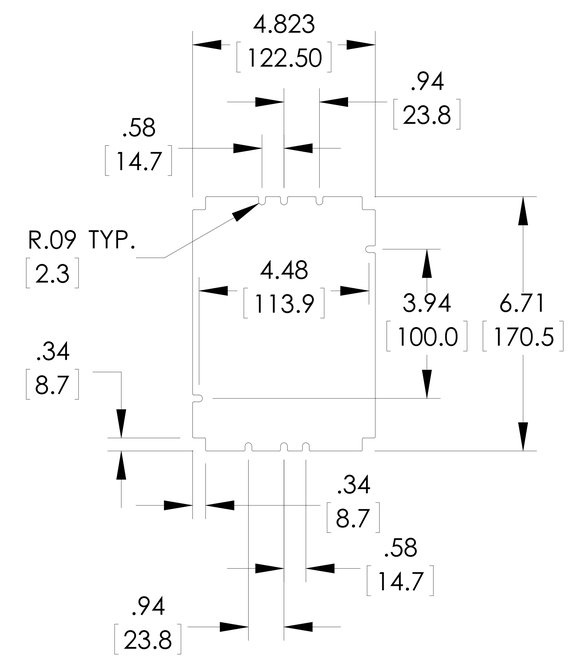

SUGGESTED PC BOARD OR
INTERNAL PANEL LAYOUT