PART NAME	NEMA 4X DIE CAST ALUMINUM ENCLOSURE	PART No.	AN-2823 AN-2823-B	REVISION DATE	8/17/2010

BODY ASSEMBLY

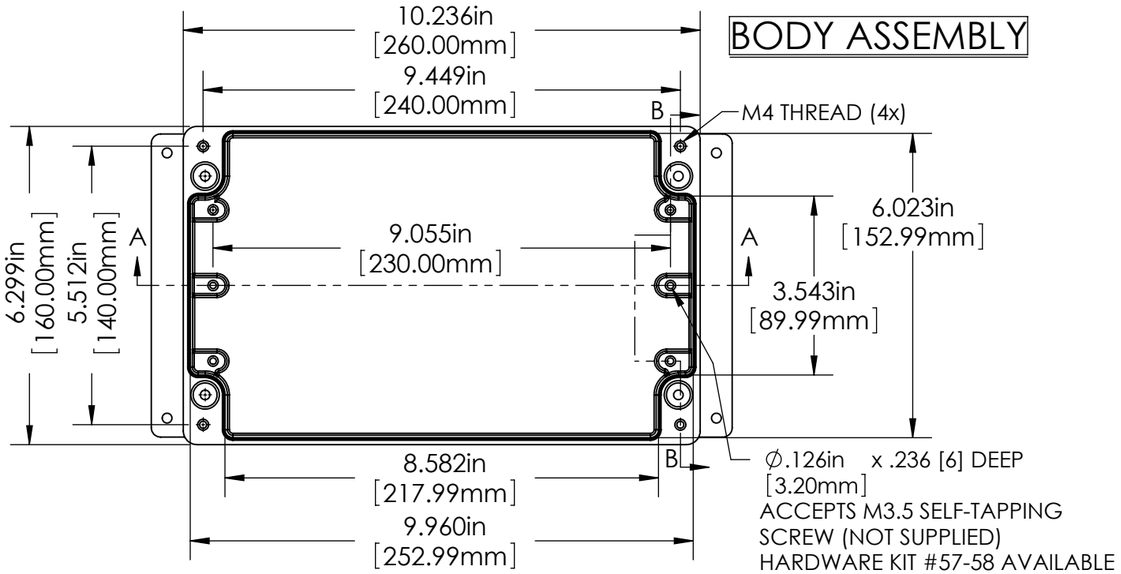

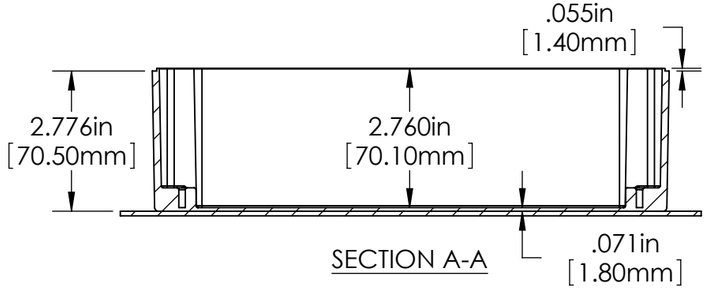

SECTION A-A

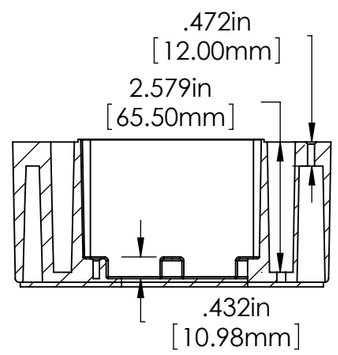

SECTION B-B

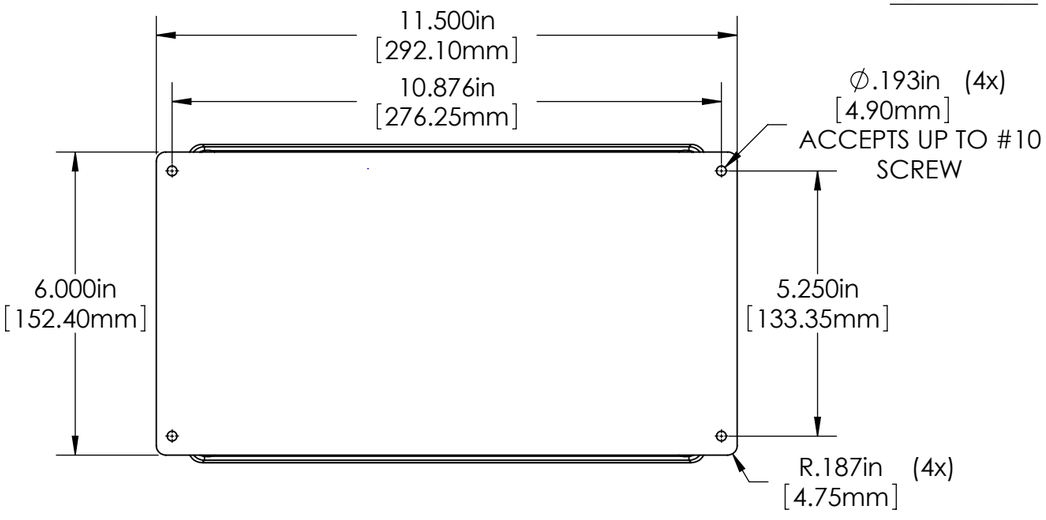

COVER

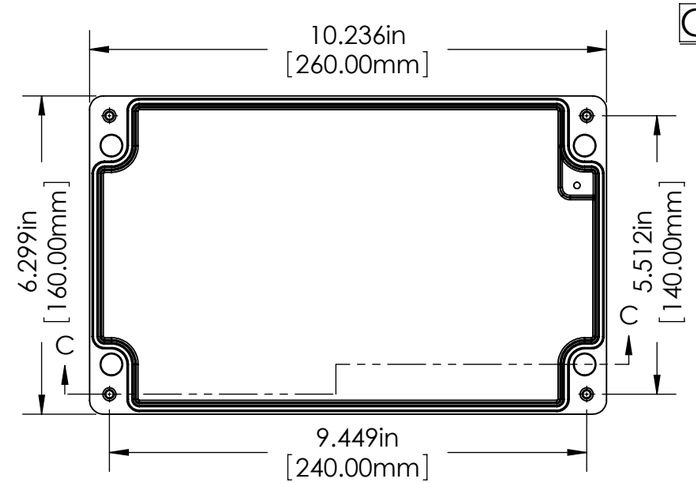

SECTION C-C

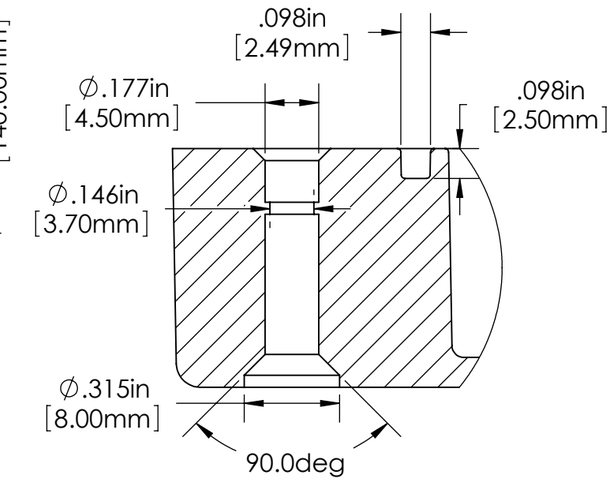

DETAIL D
SCALE 2 : 1

ASSEMBLY

FOUR (4) M4 x 32mm (1.26") LG.
FLAT HD. STAINLESS STEEL SCREWS
SUPPLIED FOR ASSEMBLY OF COVER

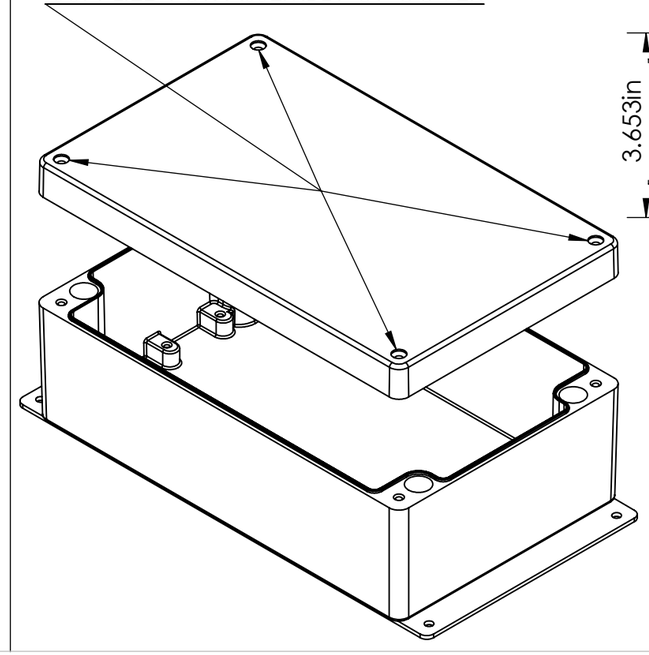

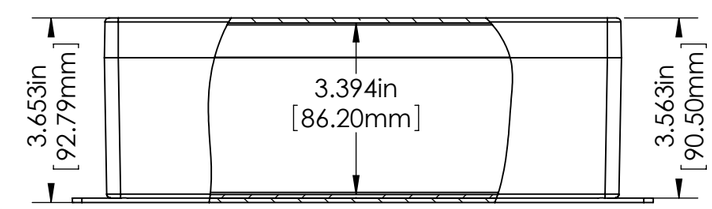

MATERIAL: ALUMINUM (ADC-12 ALLOY)

FINISH: NATURAL (NO SUFFIX PART NO.)
SMOOTH BLACK (SUFFIX -B)

TOLERANCES: ±.015 [±.38]