PART NAME	NEMA 4X PLASTIC BOX w/EXTERNAL MTG. BRKT.	PART No.	PN-1320-MB PN-1320-CMB PN-1320-DGMB	REVISION DATE	5-26-11

MATERIAL & FINISH:
(-MB SUFFIX PART NO.) POLYCARBONATE UL94-HB, UV STABILIZED, SERVICE TEMPERATURE RANGE: -40°C TO +120°C, LIGHT GRAY BODY & COVER.
(-CMB SUFFIX PART NO.) SAME AS -MB EXCEPT CLEAR COVER.
(-DGMB SUFFIX PART NO.) ABS UL94-HB, SERVICE TEMPERATURE RANGE: -40°C TO +80°C, DARK GRAY BODY & COVER.

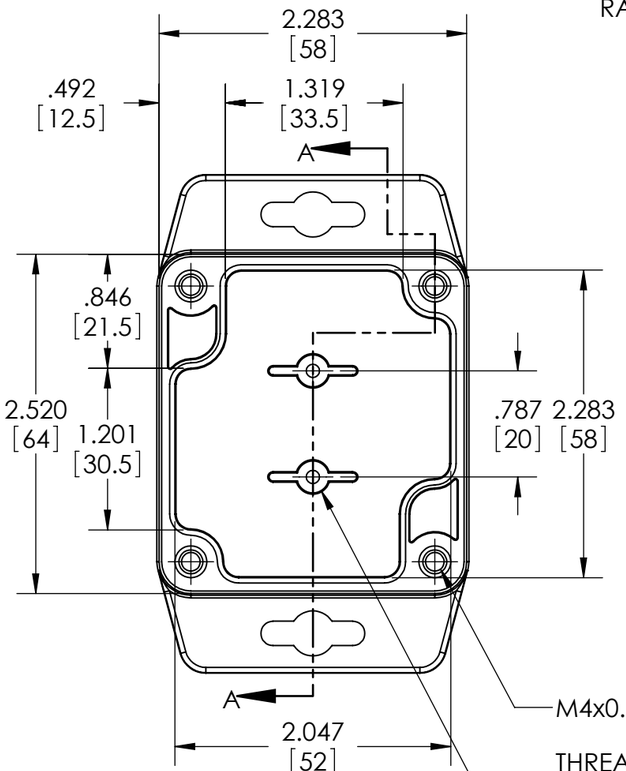

M4x0.7 x .315 LG.
[8]
THREADED BRASS INSERT (4x)

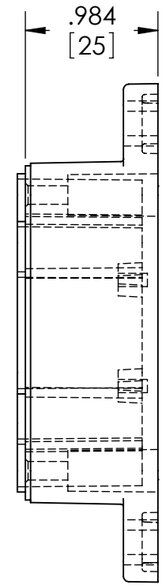

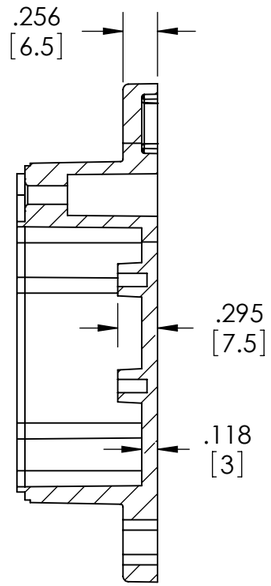

SECTION A-A

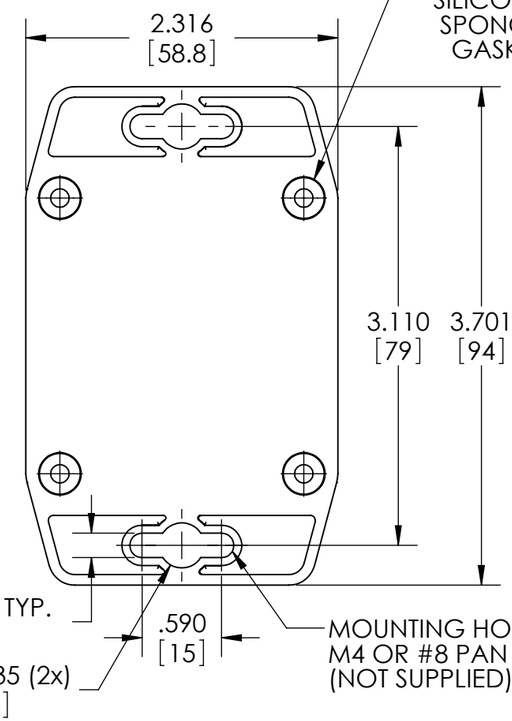

MOUNTING HOLES ACCEPT
M4 OR #8 PAN HEAD SCREW
(NOT SUPPLIED)

Ø.303 x .669 DEEP (4x)
[7.7] [17]

SILICONE SPONGE GASKET

Ø.237 BOSS WITH Ø.098 HOLE
[6] [2.5]
x .217 DEEP (2x)
[5.5]
MOUNTING BOSSES ACCEPT
M3 x 4mm LG. OR #4 x 3/16" LG.
SELF-TAPPING SCREWS
(NOT SUPPLIED)

BODY

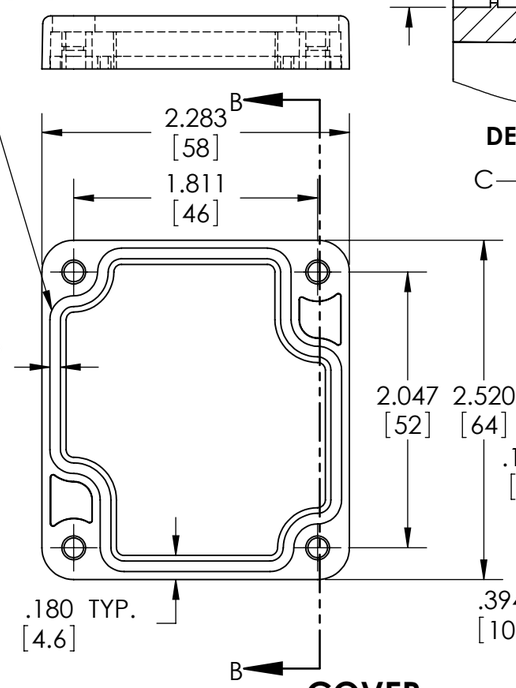

COVER

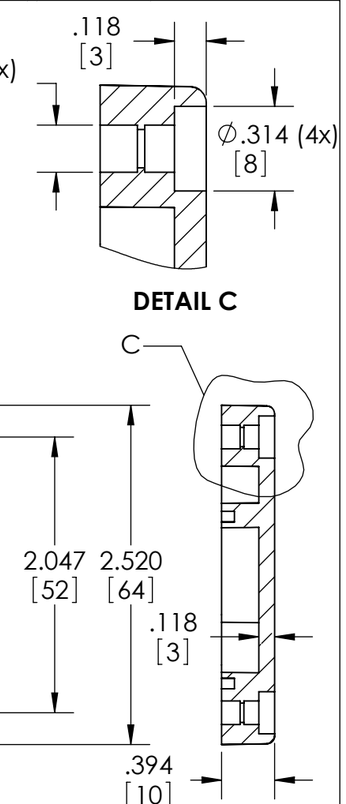

SECTION B-B

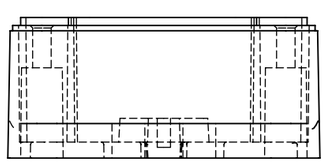

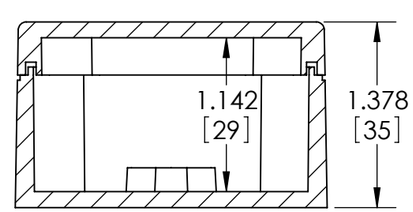

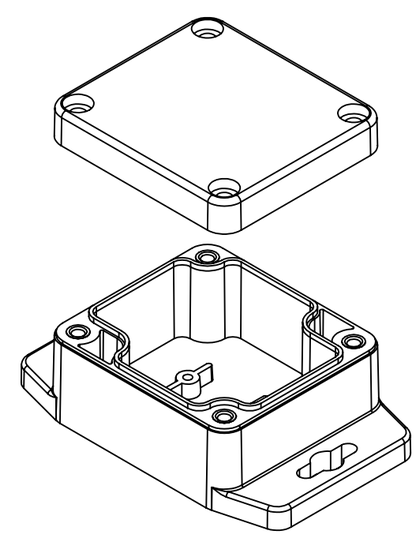

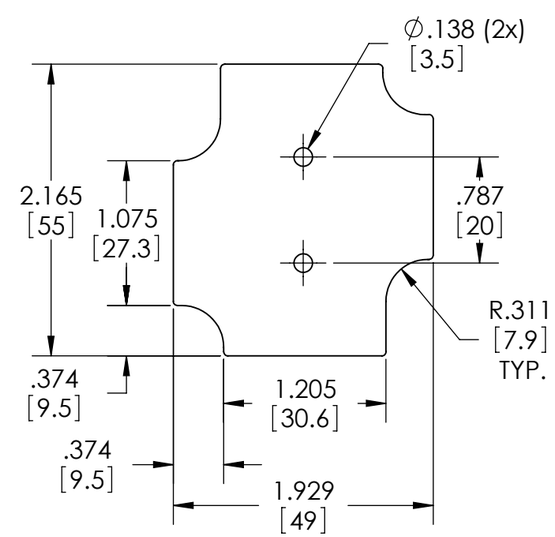

SUGGESTED PC BOARD LAYOUT

NOTES:
1.) FOUR (4) M4x0.7 x 20mm (.787") LG. STAINLESS STEEL SCREWS SUPPLIED FOR ASSEMBLY OF COVER TO BODY.
2.) BOXES DESIGNED TO MEET FOLLOWING STANDARDS: NEMA 1, 2, 4, 4X, 12, 13 AND IEC529-IP65 REQUIREMENTS.
3.) ALL HOLE DIAMETERS HAVE ±.005[.12] TOLERANCE. ALL OTHER DIMENSIONS HAVE ±.015[.38] TOLERANCE.
4.) ALL OUTSIDE DRAFT ANGLE: 1° ALL INSIDE DRAFT ANGLE: 1/2°