DIMENSIONS IN INCHES (MILLIMETERS)
DO NOT SCALE DRAWING .....

Dwg. No.
CWR-142-XX-0000

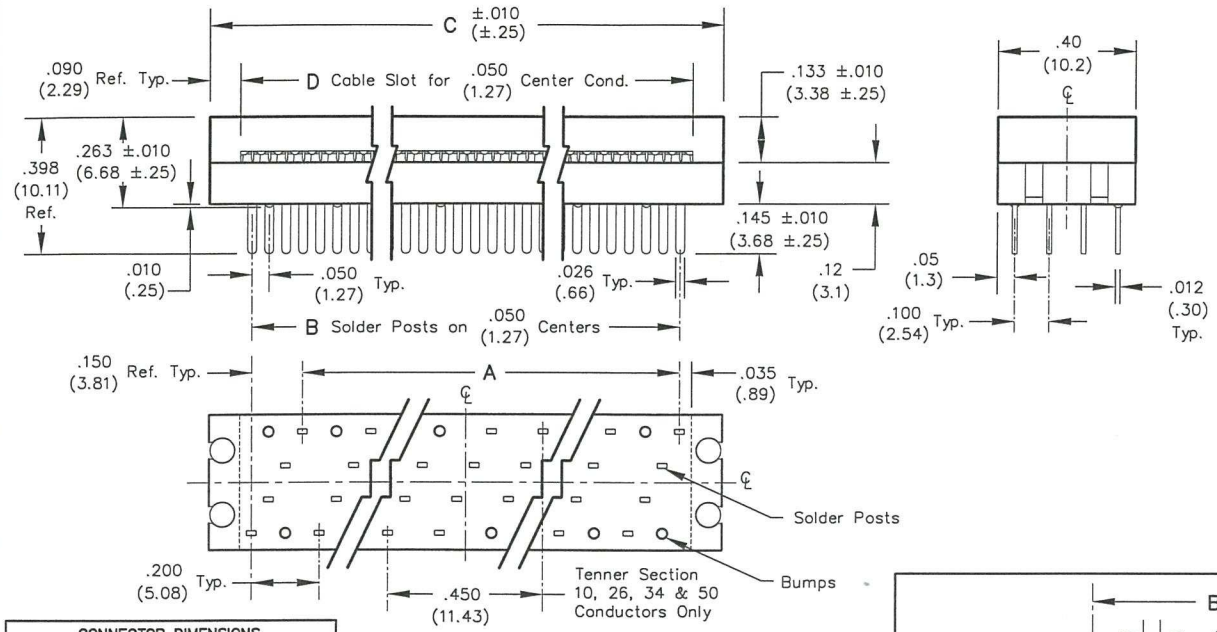

NOTES:

1. Dimensions are in inches; dimensions in ( ) are in millimeters.
2. Metric equivalents are given for general information only, and are based upon 1.00 inches equals (25.4) millimeters.
3. Unless otherwise specified, tolerance are ±.005 (±.13) for three place decimals, and ±.01 (±.3) for two place decimals.

MATERIALS:

PLASTIC PARTS – UL94V-0 Thermoplastic (blue, standard) flame retardant.

CONTACTS – Phosphor bronze, standard;

CONTACT PLATING– .000010 Gold over .000050 Nickel, Std.

OPERATING STANDARDS:

TEMPERATURE RATING – 120°C.
CONTACT RATING – 1 Ampere.
DIELECTRIC STRENGTH – Over 500 V.D.C. AT SEA LEVEL.
CONDUCTORS ACCEPTED – 28-30 AWG solid or stranded.

CONNECTOR DIMENSIONS

No. Conts. -XX	A	B	C	D
10	—	.450 (11.43)	.700 (17.78)	.520 (13.21)
20	.800 (20.32)	.950 (24.13)	1.200 (30.48)	1.020 (25.91)
26	1.100 (27.94)	1.250 (31.75)	1.500 (38.10)	1.320 (33.53)
34	1.500 (38.10)	1.650 (41.91)	1.900 (48.26)	1.720 (43.69)
40	1.800 (45.72)	1.950 (49.53)	2.200 (55.88)	2.020 (51.31)
50	2.300 (58.42)	2.450 (62.23)	2.700 (68.58)	2.520 (64.01)
60	2.800 (71.12)	2.950 (74.93)	3.200 (81.28)	3.020 (76.71)

CUSTOMER DRAWING

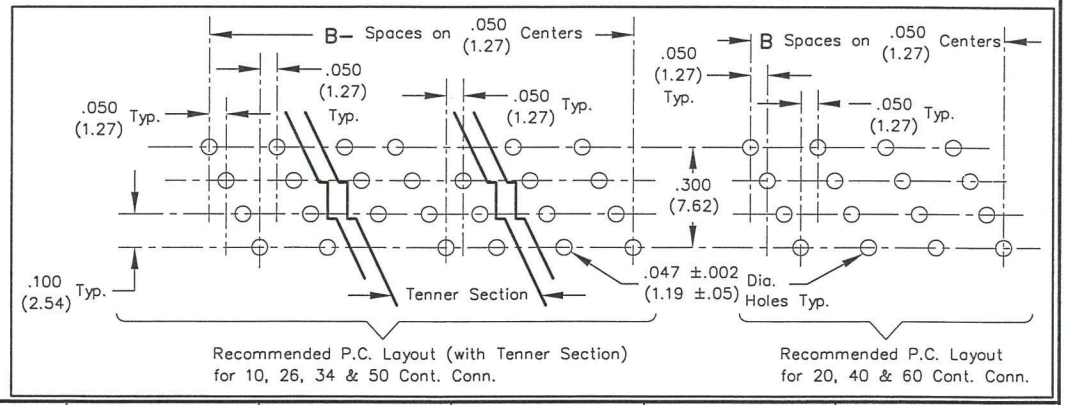

REVISIONS		
0	RELEASED. DGW	7-31-2001

FORM-B3

ATTENTION

THIS DRAWING AND ITS ATTACHMENTS, IF ANY, ARE PROPRIETARY TO CW INDUSTRIES AND DESCRIBE DESIGNS THAT ARE CONFIDENTIAL AND MUST NOT BE DISCLOSED UNLESS AUTHORIZED, IN WRITING, BY AN OFFICER OF CW INDUSTRIES.....

(PDF File Made)

CW INDUSTRIES
Southampton, Pa. 18966

TOLERANCES UNLESS OTHERWISE SPECIFIED	METRIC
2 Place Decimal ±.010	1 Place Dec. ±.25mm
3 Place Decimal ±.005	2 Place Dec. ±.13mm
Angles ..... ±1°	

Made for: CW IND.
Drawn by: DGW 7-31-2001
Checked by: G Guld 8-2-01
Approval: [illegible] 8-2-01

Title: P.C.B. CONNECTOR .145" SOLDER POSTS W/O S/R & COVER LIPS

Division: CONNECTOR

Dwg. No. CWR-142-XX-0000

MASTER