P/N: 3000M 436 REV P

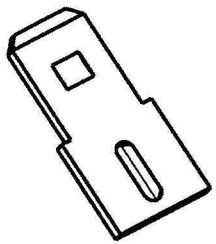

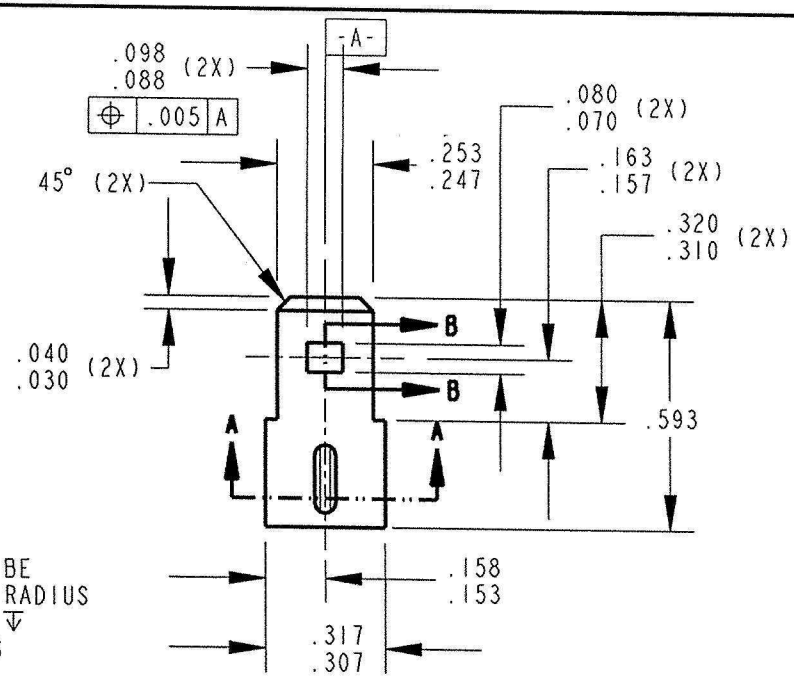

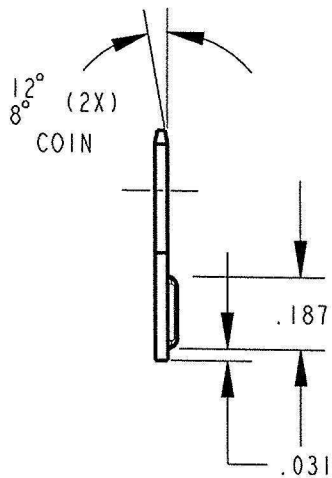

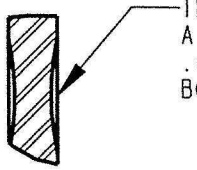

SECTION B-B
SCALE 8:1

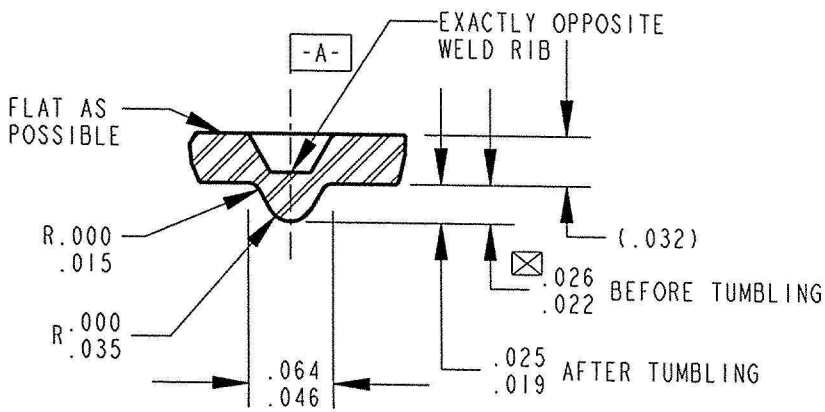

SECTION A-A
SCALE 8:1

NOTES:
1. ALL PORTIONS OF TABS SHOWN SHALL BE FLAT AND FREE OF BURRS OR RAISED PLATEAUS, EXCEPT THAT THERE MAY BE, IN AN AREA .050 INCH SURROUNDING THE DETENT, A RAISED PLATEAU OVER THE STOCK THICKNESS OF .001 INCH PER SIDE.
2. CONFORMS TO UL310.
3. TO MATE WITH .250 X .032 FEMALE RECEPTACLE.
4. ⊠ = PRE-CONTROL DIMENSION.

ARK-LES
UNCONTROLLED

REV	DESCRIPTION	DATE	DR.
P	REDRAWN PER ECR #S000073	6/29/04	BJC

PRINT DIST.		
DEPT	#	
ENG	1	
SALES		
STO	7	
RAL		
JZ		
CHINA		

PROD. REL.	14211	1/14/66	CHK'D
QUOTE REL.	14211	1/14/66	DB 6/6/04
DRAWN BY	BJC 6/29/04		APP.
SUPERSEDES DWG. DATED:	7/6/95		RJD 8-16-04
SCALE 2:1	DO NOT SCALE PRINT		
MATERIAL:	.032 ±001 THK C.R. STEEL, #1010, 1/4 HARD, #3 TEMPER		
FINISH:	NICKEL PLATE PER PCS 1000		

TOLERANCES UNLESS OTHERWISE SPECIFIED
DECIMALS ±.010
METRIC ±0.25mm
ANGLES ±1°
3RD ANGLE PROJECTION
DWG SIZE: A

Ark-Les CORPORATION STOUGHTON, MA

ORIGINAL IF RED

PART NAME: TERMINAL-MALE

CAD#: 3000M436-REVP.DRW

P/N: 3000M 436 P