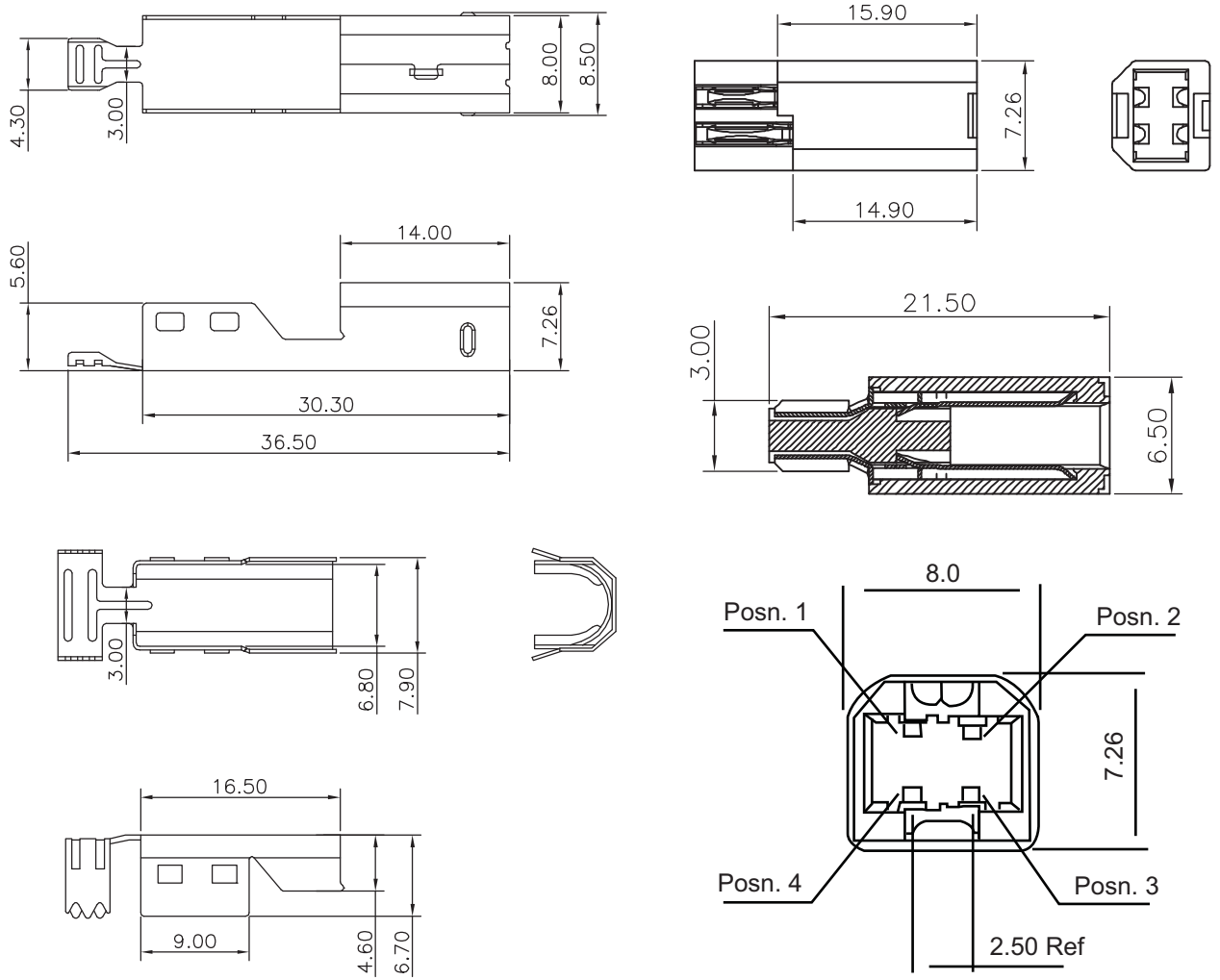


**Material:**

- Housing: PBT+30%GF UL 94V-0
- Contact: Brass
- Shell: SPCC
- Contact: 30μ Gold Contact Plating over Nickel Plated
- Shell: Nickel Over All Plating

**Electrical:**

- Voltage Rating: 30V
- Current Rating: 1.5A
- Contact Resistance Terminal: 30MΩ Max
- Dielectric Withstanding Voltage: 500V AC
- Insulation Resistance: 1000MΩ Min

**Mechanical:**

- Mating: 35N Max
- Withdrawl Force: 10N Min
- Durability: 1500 Cycles Min

**Environmental:**

- Temperature Range: -20°~+85°C

Unit: MM±0.15MM

| | |
|---|---|
| Scale | 1:1 |
| TOLERANCE | |
| X.X | ±0.40 |
| X.XX | ±0.25 |
| X.XXX | ±0.15 |
| Angle | ±3° |

| Modification | Date | Name |
|---|---|---|
| | | |

| | | Name |
|---|---|---|
| Drawn | 10.19.11 | Chappell |
| Approved | | |

Item No.

**A-USBPB-2-R**

Title: USB, Type B, Assembly-Type, Version 2.0

Drawing No.

**rev00**

Replace

Sheet

RoHS Complaint

ASSMANN WSW components