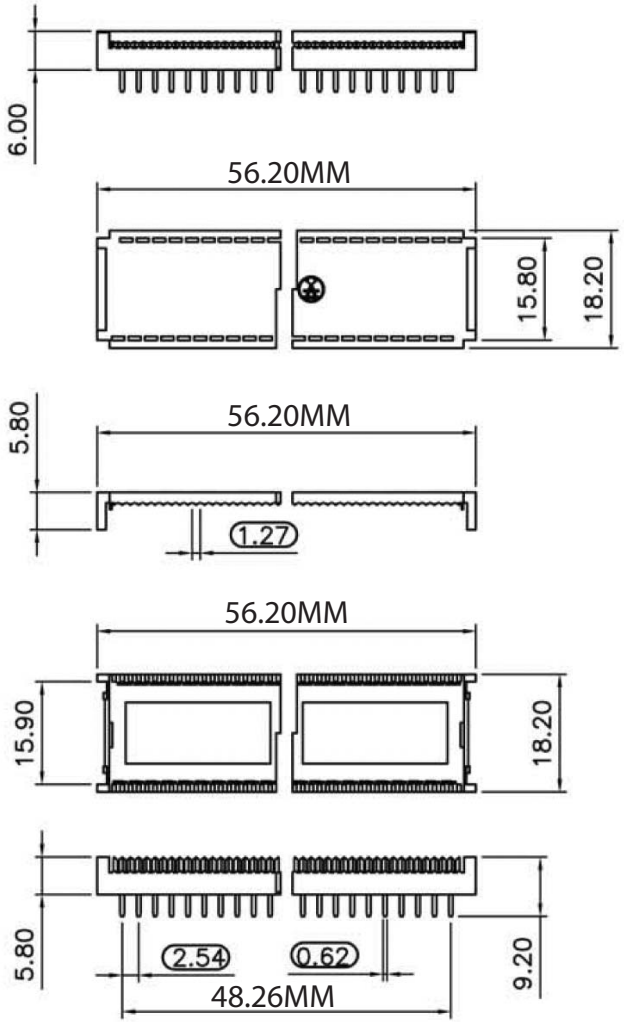

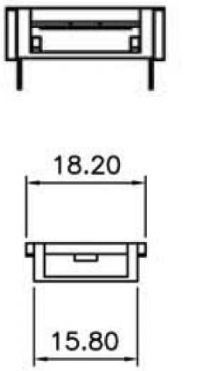

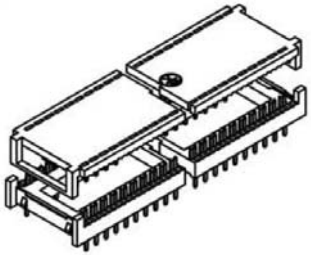

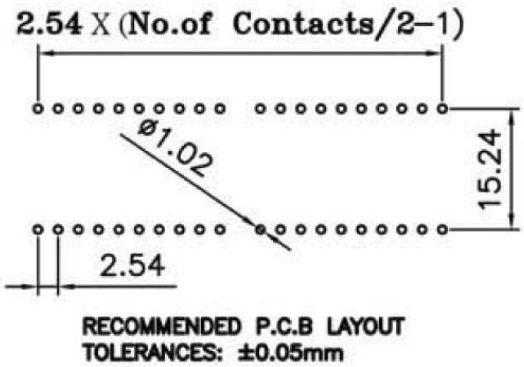

Materials:

- Insulator: P.B.T. 30%Glass Fiber, UL94V-0
- Contacts: Brass, Full Tin over Nickel

Electrical:

- Current Rating: 3AMP
- Contact Resistance: 20μ"MΩ Max / 1A DC
- Insulation Resistance: 5,000MΩ Min.
- Dielectric Withstanding: 1,000V AC
- Operating Temperature: -40°C ~ +105°C

RoHS Complaint

Scale	1:1							Name
TOLERANCE						Drawn	10.28.11	Chappell
X.X	±0.40					Approved		
X.XX	±0.25							
X.XXX	±0.15							
Angle	±3°							
			Modification	Date	Name			

ASSMANN WSW components

Item No.
ADIP40-Z-LC-R

Title DIP-Connector, 2.54 x 15.24MM, 40 Contacts, Tin Plated

Drawing No.

rev00

Replace

Sheet