REV.	DATE	ECR NO.	DESCRIPTION
NC	08/25/09	XXXXXX	INITIAL RELEASE

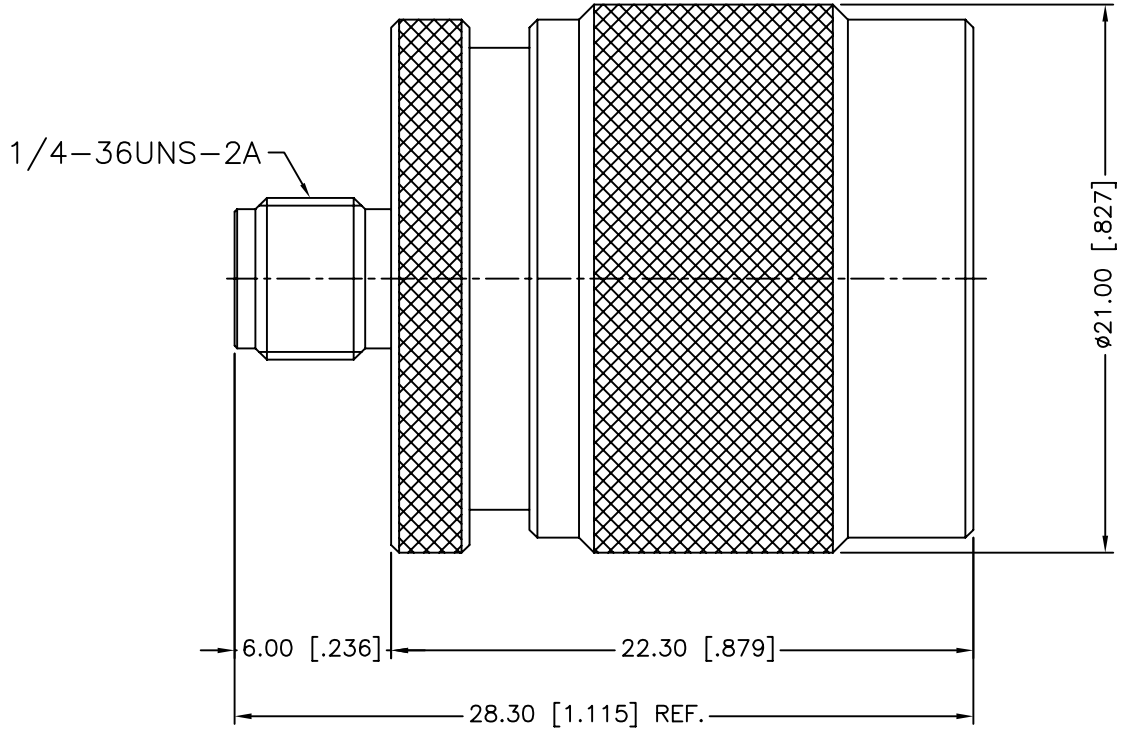

	DESCRIPTION	MATERIAL	FINISH	QTY
8				
7	CONTACT BODY	BRASS	NICKEL	1
6	SHELL	BRASS	NICKEL	1
5	RETAINER RING	SUS 304	NATURAL	1
4	GASKET	SILICONE	RED	1
3	CONTACT PIN	PHOSPHOR BRONZE	GOLD	1
2	INSULATOR	PTFE	NATURAL	1
1	BODY	BRASS	NICKEL	1

UNLESS OTHERWISE SPECIFIED DIMENSIONS ARE IN MILLIMETERS. DIMENSIONS IN [ ] ARE IN INCHES AND FOR CUSTOMER REFERANCE ONLY.

UNLESS OTHERWISE SPECIFIED TOLERANCES FOR MILLIMETERS ARE:
0.5 – 8mm ± 0.20mm
8 – 30mm ± 0.40mm
30 – 120mm ± 0.50mm

UNLESS OTHERWISE SPECIFIED TOLERANCES FOR INCHES ARE:
.020 – .315 = ± 0.007"
.315 – 1.180 = ± 0.015"
1.180 – 4.724 = ± 0.020"

DO NOT SCALE DRAWING

APPROVALS		DATE
DRAWN	CW	08/25/09
CHECKED		
ISSUED		
SHEET	1 OF 1	

CAD FILE C:/CONNEX/242113.DWG

Amphenol Connex

PART DESCRIPTION: N MALE TO SMA FEMALE ADAPTOR

PART NO. 242113

DWG. NO. 242113.DWG | REV. NC | SIZE A | SCALE NA