REV.	DATE	ECR NO	DESCRIPTION
NC	05/07/98	--	INITIAL RELEASE
A	07/28/06	--	REVISE PCB MOUNTING LEGS, UPDATE DRAWING FORMAT
B	02/17/10	2012	HARDWARES REMOVED

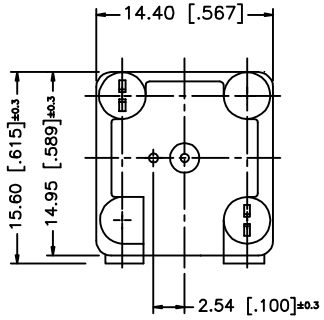

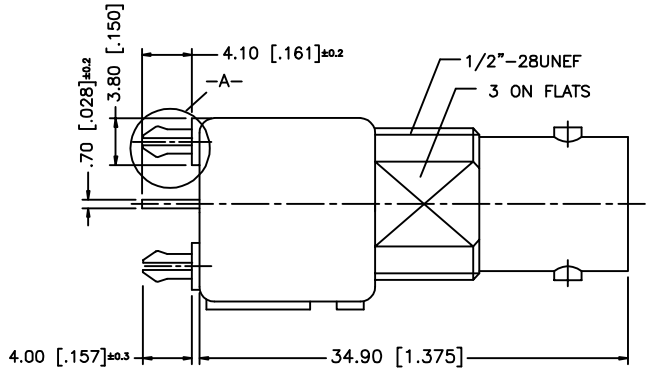

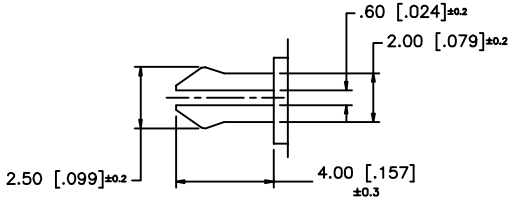

DETAIL -A-
(2X SCALE)

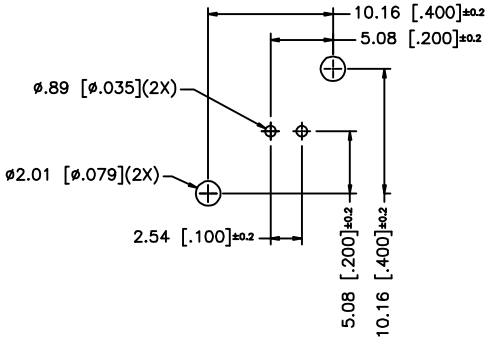

PCB MOUNTING HOLES

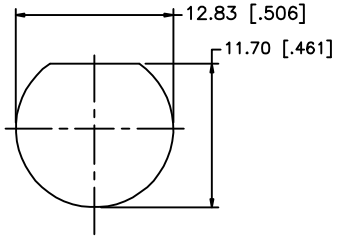

RECOMMENDED
MOUNTING HOLE

	DESCRIPTION	MATERIAL	FINISH
1	BODY	DIE CAST	NICKEL
2	INSULATOR	P.P.	NATURAL
3	CONTACT PIN	PHOS. BRONZE	GOLD
4			
5			
6			
7			
8			

UNLESS OTHERWISE SPECIFIED DIMENSIONS ARE IN MILLIMETERS

DIMENSIONS IN [ ] ARE IN INCHES FOR CUSTOMER REFERANCE ONLY

UNLESS OTHERWISE SPECIFIED TOLERANCES FOR MILLIMETERS ARE:

0.5–6 = ± 0.2
6–30 = ± 0.4
30–120 = ± 0.6
120–315 = ± 1
315–1000 = ± 1.6
1000–2000 = ± 2.4

DO NOT SCALE DRAWING

APPROVALS		DATE
DRAWN	CLEMENT	02/17/10
CHECKED		
ISSUED		

Amphenol Connex

TITLE: BNC STRAIGHT PC MOUNT RECEPT. JACK 50 ohm

SIZE	FSCM NO.	DWG. NO.	REV.
A	99001	112488.DWG	B

SCALE NA | PART NO. 112488 | SHEET 1 OF 1