REV.	DATE	ECR NO.	DESCRIPTION
A	11/04/03	XXXXX	MODIFY CONTACT OPENING/ PART DESCRIPTION
B	01/15/04	XXXXX	MODIFY PART DESCRIPTION/ ADD CRIMP NOTES
C	06/23/10	XXXXX	MODIFY THE MATERIAL OF ITEM 3

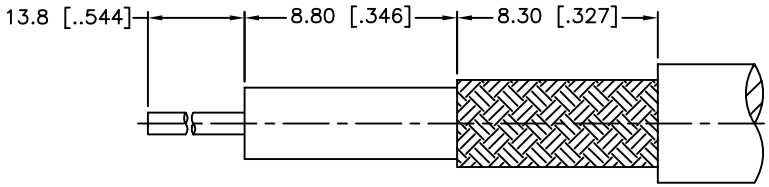

RECOMMENDED
CABLE STRIPPING DIM'S

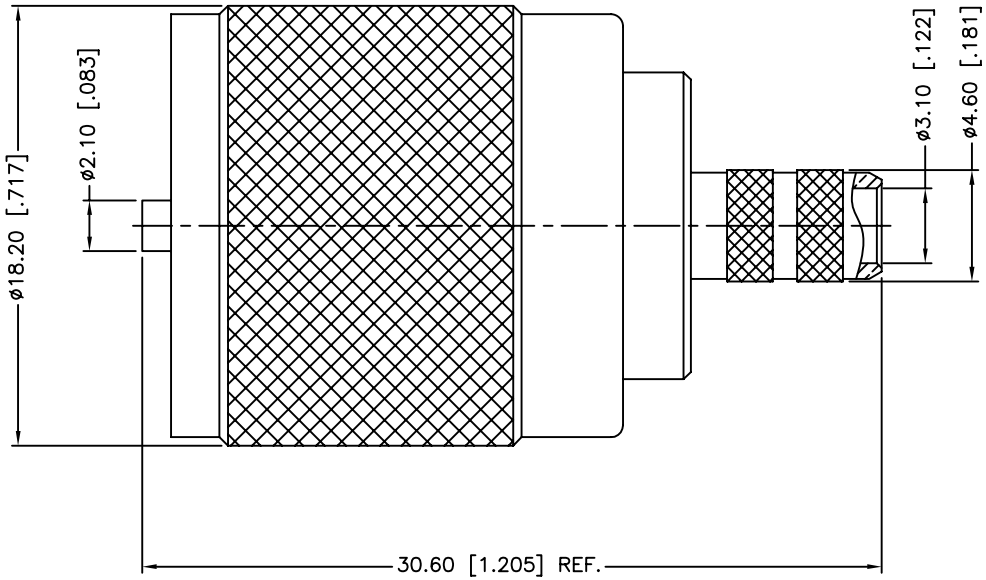

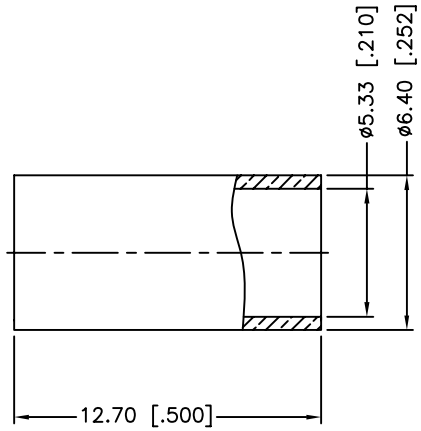

1. CRIMPED FERRULE
   HEX CRIMP SIZE .213"
2. CRIMPED CONTACT PIN
   HEX CRIMP SIZE .068"

	DESCRIPTION	MATERIAL	FINISH	QTY
5	FERRULE	BRASS	NICKEL	1
4	CONTACT PIN	BRASS	GOLD	1
3	INSULATOR	PHENOLIC	YELLOW	1
2	BODY	BRASS	NICKEL	1
1	SHELL	BRASS	NICKEL	1

UNLESS OTHERWISE SPECIFIED DIMENSIONS ARE IN MILLIMETERS. DIMENSIONS IN [ ] ARE IN INCHES AND FOR CUSTOMER REFERANCE ONLY.

UNLESS OTHERWISE SPECIFIED TOLERANCES FOR MILLIMETERS ARE:
0.5 – 8mm ± 0.20mm
8 – 30mm ± 0.40mm
30 – 120mm ± 0.50mm

UNLESS OTHERWISE SPECIFIED TOLERANCES FOR INCHES ARE:
.020 – .315 = ± 0.007"
.315 – 1.180 = ± 0.015"
1.180 – 4.724 = ± 0.020"

DO NOT SCALE DRAWING

APPROVALS		DATE
DRAWN	M.ZHANG	06/23/10
CHECKED		
ISSUED		
SHEET	1 OF 1	

CAD FILE C:/CONNEX/182100.DWG

Amphenol Connex

PART DESCRIPTION
UHF CRIMP PLUG
(FOR RG-58, 141", LMR200 CABLE)

PART NO. 182100

DWG. NO. 182100.DWG | REV. C | SIZE A | SCALE NA