NOTES:
1. MATERIALS AND FINISHES:
   BODY – BRASS, NICKEL PLATING
   CONTACT – BRASS, GOLD PLATING
   INSULATOR – PTFE, NATURAL
2. ELECTRICAL:
   A. IMPEDANCE: 50 OHM
   B. FREQUENCY RANGE: DC 0–2 GHz
   C. DIELECTRIC WITHSTANDING VOLTAGE: 1500 VRMS, MIN.
3. MECHANICAL:
   A. DURABILITY: 500 CYCLES MIN.
   B. TEMPERATURE RANGE: – 65°C to +165°C
4. SOLDERING CONTACT TO CABLE.
   WHEN CRIMPING CONTACT TO CABLE, CRIMP WITH AMPHENOL TOOL 227–944 (M22520/5–01) AND DIE SET 227–1221–13, CAVITY 'B' (M22520/5–13, CLOSURE 'B')
5. WHEN CRIMPING FERRULE TO CABLE, CRIMP WITH AMPHENOL TOOL 277–944 (M22520/5–01) AND DIE SET 227–1221–13 CAVITY 'A' (M22520/5–13 CLOSURE 'A')
6. ALTERNATE CRIMP USE 227–987 AND 227–1419 DIE

THIRD ANGLE PROJ.

REVISIONS

REV	DESCRIPTION	DATE	ECO	APPR
A2	SEE SHEET 1	30–Jun–05	– –	KERRY
B	SEE SHEET 1	12–Mar–08	– –	SUSAN
J	REDRAWN TO UPDATE FORMAT	26–Dec–08	47204	SH
K	SEE SHEET 1	09–Sep–10	47967	SH
L	NOTE 4 WAS CHANGED\RD–10121301F	27–Dec–10	48342	SH

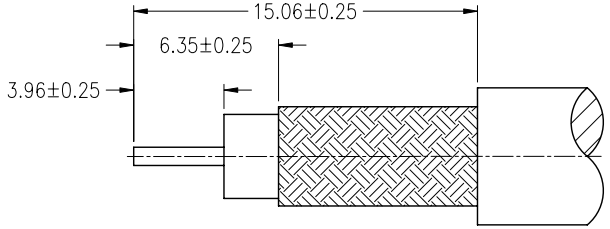

RECOMMENDED
CABLE STRIPPING DIM'S

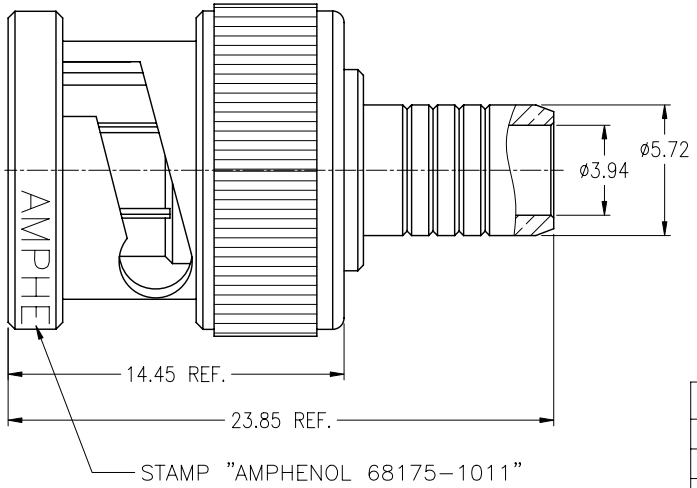

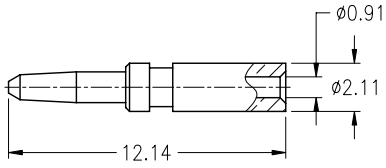

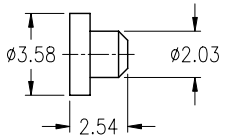

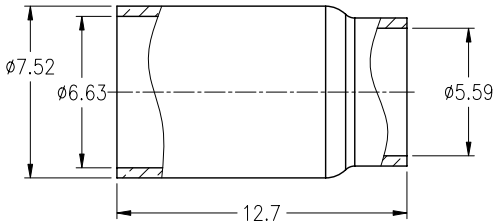

CABLE USAGE CHART	
CABLE MFG.	CABLE MFG. PART NO.
ALPHA	9162F
BELDEN	82259, 82269, 86262, 89259, 89269
COMSCOPE	2040
GEPCO	7250, VPM2000TK
MONTROSE	CBL 5743

THIS CONNECTOR IS COVERED BY U.S. PATENT 3,336,536

CUSTOMER OUTLINE DRAWING

ALL OTHER SHEETS ARE FOR INTERNAL USE ONLY

UNLESS OTHERWISE SPECIFIED, DIMENSIONS ARE IN METRIC AND TOLERANCES ARE:

<0.5mm	0.5 – 6mm	6 – 30mm	30 – 120mm	ANGLES
±0.05mm	±0.1mm	±0.2mm	± 0.3mm	±1°

NOTICE – These drawings, specifications, or other data (1) are, and remain the property of Amphenol Corp. (2) must be returned upon request; and (3) are confidential and not to be disclosed to any person other than those to whom they are given by Amphenol Corp. The furnishing of these drawings, specifications, or other data by Amphenol Corp., or to any other person to anyone for any purpose is not to be regarded by implication or otherwise in any manner licensing, granting rights or permitting such holder or any other person to manufacture, use or sell any product, process or design, patented or otherwise, that may in any way be related to or disclosed by said drawings, specifications, or other data.

MATERIAL

REFERENCE

FINISH

DRAWN F.WANG DATE 27–Dec–10
ENGINEER S.LI DATE 27–Dec–10
APPROVED S.HSIEH DATE 27–Dec–10
CAD FILE F:\DWG\CNPD\68175\1011–LSZ

TITLE
BNC PLUG QUICK CRIMP
50 OHMS

SCALE: 3/1 | SHEET 2 OF 2
DWG SIZE B | CODE ID 74868 | REV L

Amphenol RF
Danbury CT USA, Tainan Taiwan, Shenzhen China
www.amphenolrf.com

DRAWING NO. 68175–1011
ITEM NO. 68175–1011
PART NO. 68175–1011