NOTES:
1. MATERIALS AND FINISHES(PLATING THICKNESS IN MICRO-INCHES):
   BODY – BRASS & ZINC DIECAST, NICKEL PLATING
   CONTACT – BRASS & PHOSPHOR BRONZE, GOLD PLATING
   INSULATOR – DELRIN, NATURAL
2. ELECTRICAL:
   A. IMPEDANCE: 50 OHM
   B. FREQUENCY RANGE: DC 0–4 GHz
   C. DIELECTRIC WITHSTANDING VOLTAGE: 1500 VRMS, MIN.
3. MECHANICAL:
   A. DURABILITY: 500 CYCLES MIN.
   B. TEMPERATURE RANGE: – 40°C to +85°C

THIRD ANGLE PROJ.

REVISIONS				
REV	DESCRIPTION	DATE	ECO	APPR
D1	ADDED DRAWING NO.\N/A	24-Feb-00'		
E	STAMP FOR ITEM 1 WAS CHANGED\RD-DM08052801T	27-Jun-08'		SH
F	SEE SHEET 1	6-Jun-10'	47921	

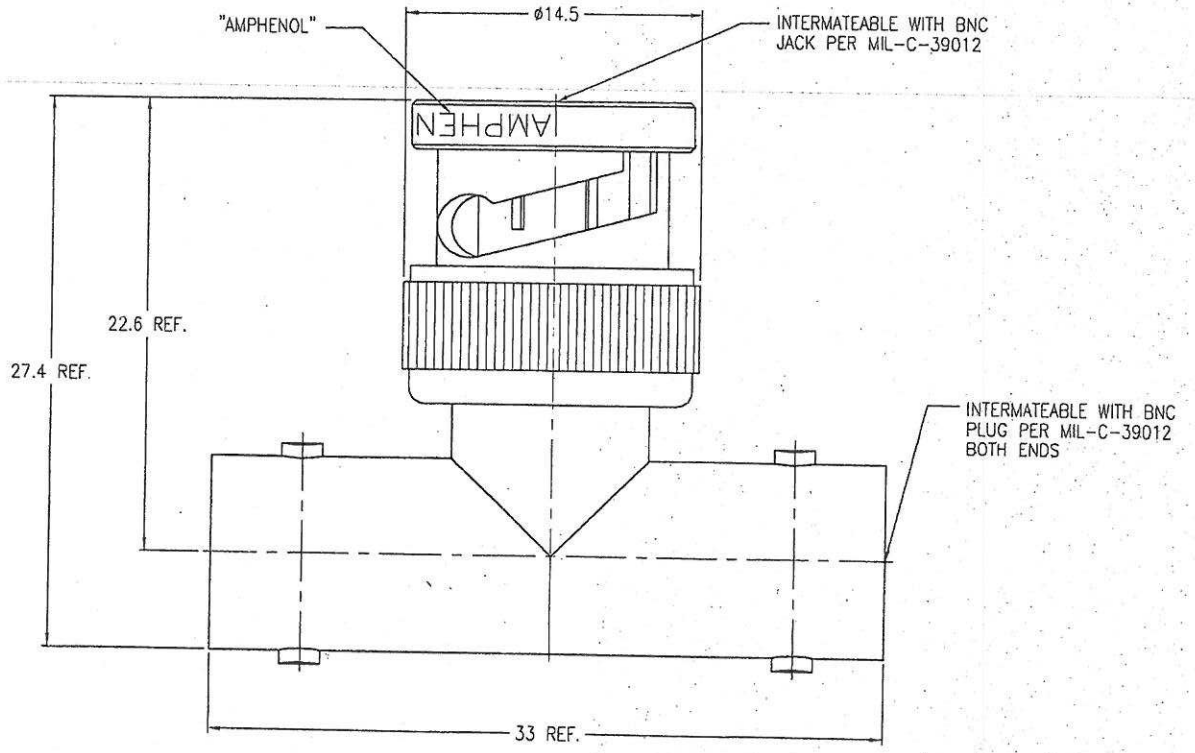

CUSTOMER OUTLINE DRAWING

ALL OTHER SHEETS ARE FOR INTERNAL USE ONLY

UNLESS OTHERWISE SPECIFIED, DIMENSIONS ARE IN METRIC AND TOLERANCES ARE:

<0.5mm	0.5 – 6mm	6 – 30mm	30 – 120mm	ANGLES
±0.05mm	±0.1mm	±0.2mm	± 0.3mm	±1°

NOTICE – These drawings, specifications, or other data (1) are, and remain the property of Amphenol Corp. (2) must be returned upon request; and (3) are confidential and not to be disclosed to any person other than those to whom they are given by Amphenol Corp. The furnishing of these drawings, specifications, or other data by Amphenol Corp., or to any other person to anyone for any purpose is not to be regarded by implication or otherwise in any manner licensing, granting rights or permitting such holder or any other person to manufacture, use or sell any product, process or design, patented or otherwise, that may in any way be related to or disclosed by said drawings, specifications, or other data.

MATERIAL

REFERENCE

FINISH

DRAWN T.DENG	DATE 06-Jan-10	
ENGINEER C.WANG	DATE 06-Jan-10	
APPROVED S.HSIEH	DATE 06-Jan-10	
CAD FILE F:\DWG\APL\CNPD\RFX\31\208\ND3G-FSZ		

TITLE
BNC TEE ADAPTOR
JACK – PLUG – JACK
UG274A/U TYPE, 50 OHM

SCALE: 3/1	SHEET 2 OF 2	
DWG SIZE B	CODE ID 74868	REV F

Amphenol RF
Danbury CT USA, Tainan Taiwan, Shenzhen China
www.amphenolrf.com

DRAWING NO. 31-208-ND3G-50
ITEM NO. 31-208-ND3G-50
PART NO. 31-208-RFX

RD-DR 32056 page2