NOTES:

1. MATERIALS AND FINISHES:
   SHELL : BRASS(C3604), PLATING-Ni 1~5 µm + Au 0.03 µm MIN
   A-PIN(Moving) : BeCu(C17200R-1/2HM), PLATING-Ni 1~5 µm + Au 0.2 µm MIN
   B-PIN(Fixed) : PHOSPHORUS BRONZE(C52100R-1/2H), PLATING-Ni 1~5 µm + Au 0.2 µm MIN
   MOLD : PA9T
2. ELECTRICAL:
   A. IMPEDANCE : 50 OHM
   B. FREQUENCY RANGE : DC - 3 GHz
   C. VSWR : 1.6 MAX.
   D. DIELECTRIC WITHSTANDING VOLTAGE : 1 MIN. AC 100V VRMS
3. MECHANICAL:
   A. DURABILITY : 5000 CYCLES MIN
   B. TEMPERATURE RANGE: -35°C TO +85°C
4. PACKAGING:
   TAPE AND REEL

902-9046	REVISIONS				
DRAWING NO.	REV	DESCRIPTION	DATE	ECO	APPR
THIRD ANGLE PROJ.	A	RELEASE TO MFG.	9/23/08	47292	JL

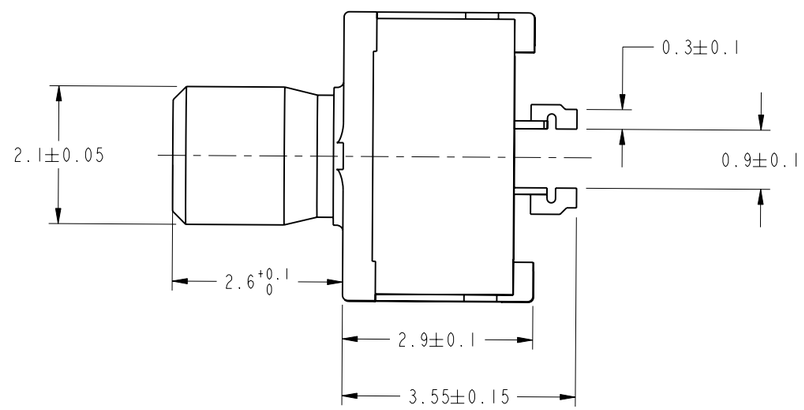

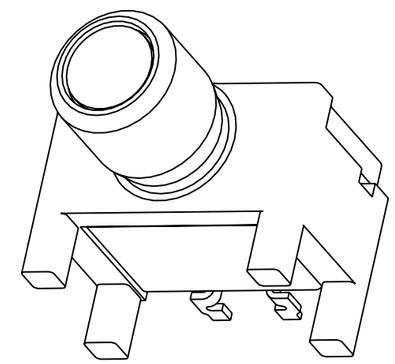

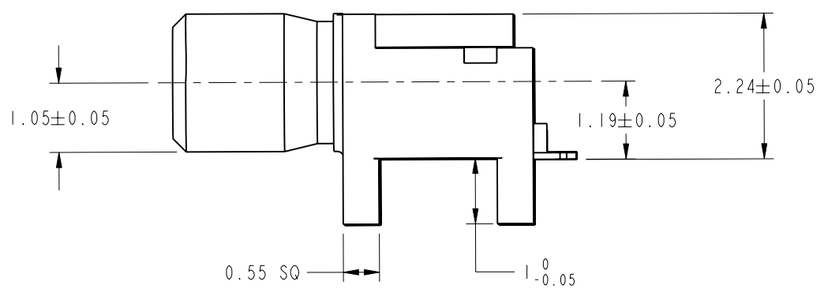

- NOTES-
1. COPLANARITY : MAX. 0.1
2. RF SWITCH CIRCUIT DIAGRAM:

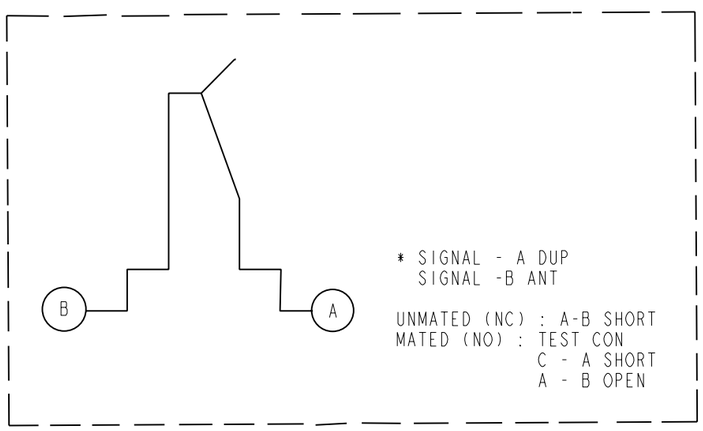

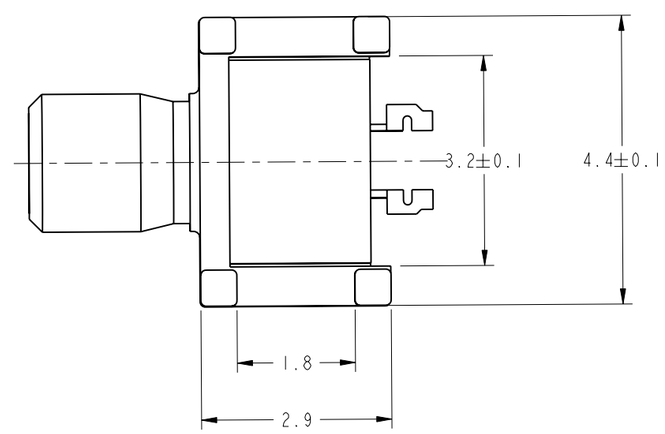

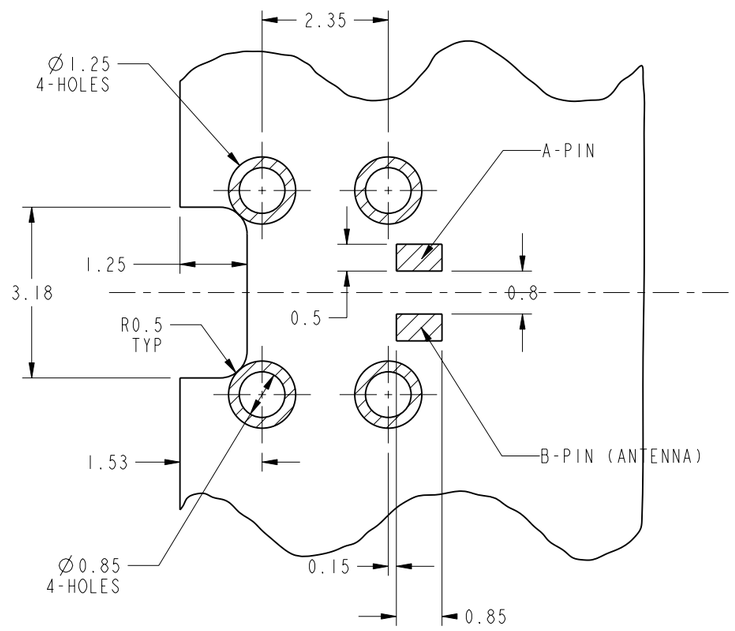

METRIC DRAWING

CUSTOMER OUTLINE DRAWING

ALL OTHER SHEETS ARE FOR INTERNAL USE ONLY

UNLESS OTHERWISE SPECIFIED, DIMENSIONS ARE IN INCHES AND TOLERANCES ARE:
2 PLACE DECIMAL ±.015 (0,381 mm) | 3 PLACE DECIMAL ±.005 (0,127 mm) | ANGLES ± 1°

NOTICE - These drawings, specifications, or other data (1) are, and remain the property of Amphenol Corp. (2) must be returned upon request; and (3) are confidential and not to be disclosed to any person other than those to whom they are given by Amphenol Corp. The furnishing of these drawings, specifications, or other data by Amphenol Corp., or to any other person to anyone for any purpose is not to be regarded by implication or otherwise in any manner licensing, granting rights or permitting such holder or any other person to manufacture, use or sell any product, process or design, patented or otherwise, that may in any way be related to or disclosed by said drawings, specifications, or other data.

MATERIAL	DRAWN: JIA YONG LI	DATE: 18-Sep-08	TITLE: RF SWITCH CONNECTOR
	ENGINEER: JIA YONG LI	DATE: 18-Sep-08	
REFERENCE: EAR # 3161	APPROVED: K. CAPOZZI	DATE: 9/22/08	
	CAD FILE: I:/SWITCH/ 902-9046		

Amphenol
Amphenol Corporation
Communication and Network Products Division
Danbury, CT U.S.A. 06810

SCALE: 11.0:1	SHEET 2 OF 3			
CODE ID	DWG SIZE	DRAWING NO.	REV
74868	B	902-9046	A