This document is the property of Amphenol Corporation and is delivered on the express condition that it is not to be disclosed, reproduced or used, in whole or in part, for manufacture or sale by anyone other than Amphenol Corporation without its prior concent, & that no right is granted to disclose or to use any information in this document.

REVISIONS				
SYM	ECN	DESCRIPTION	DATE	APPROVED
1			12/10/08	

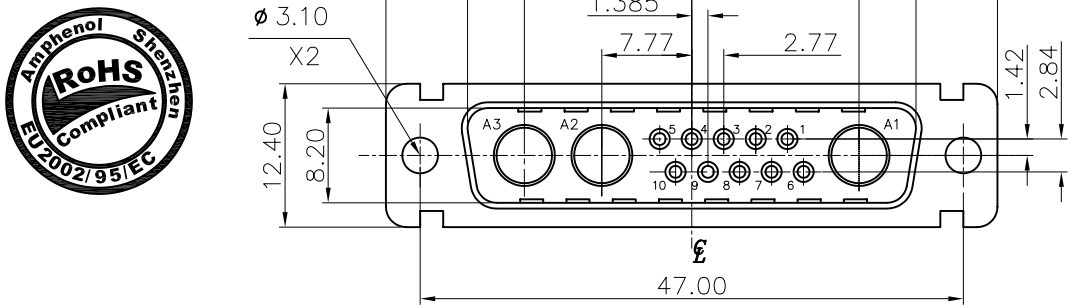

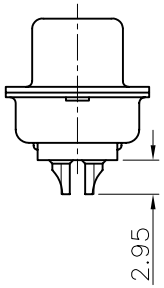

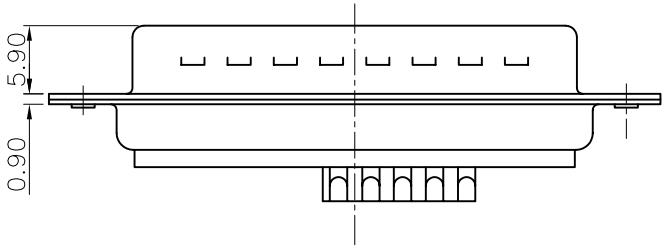

Customer drawing

D-SUB TECHNICAL DATA

SHELL : Steel 2.5um(100u") min. tin over 1.25um(50u") min. nickel

BODY : Glass filled thermoplastic.
Flame retarding to UL94 V-0 Color Black

CONTACTS : Brass, 0.4um(15u") min. gold over 1.25um(50u") min. nickel

ELECTRICAL : Voltage rating 300 V RMS at 50 Hz
Current rating 7.5A
Withstanding Voltage >1000 V RMS at 50 Hz for one minute
Insulation resistance >5000 M Ohms
Contact resistance 20 mOhms max.

CLIMATIC : Temperature range -55 °C up to 155°C
Damp heat 56 days(40 °C-95% HR)
Salt spray 48 hours

MARKING : Amphenol-...(Series No.)
Commercial reference
Manufacturing date

PRODUCT CODE

L 717TW B 13W3 P

- L: RoHS Compliance
- 717TW: tin plated shell with dimples
- Shell Size :B
- Configuration: 13W3
- Contact type: S:Female P: Male

UNLESS OTHERWISE SPECIFIED TOLERANCES	U.S.	METRIC
.X +/-		0.50
.XX +/-		0.30
.XXX +/-		0.20
FRACTIONS +/-		
ANGLES +/-		2°

FOR MATERIALS AND FINISHES SEE NOTES

REMOVE SHARP EDGES

DIMENSIONS: U.S. INCHES / METRIC MM

APPROVAL		DATE
DRAWN	Christine	12/10/08
CHECKED	kk.wang	12/10/08
CHECKED		

DRAWING FILE :

ANGLE OF PROJECTION

Amphenol®

TITLE: Hybrid D-SUB connectors, TW series

SIZE	DRAWING NO.	REV.
A4	C L717TWB13W3P	1
SCALE	NONE	SHEET 1 OF 1