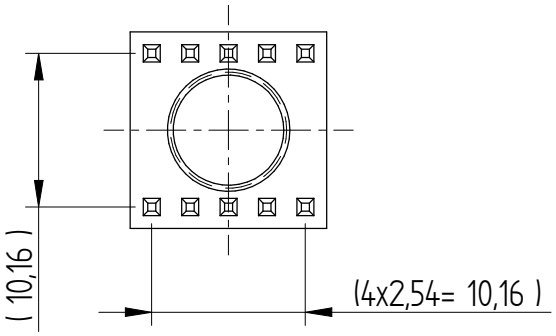

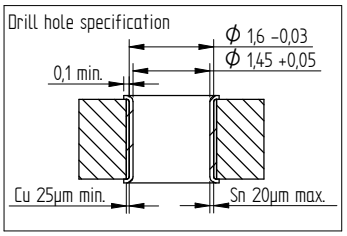

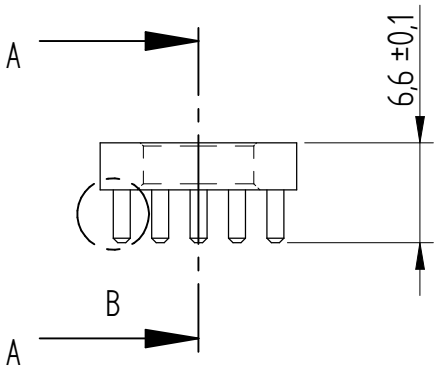

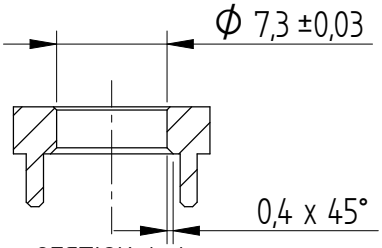

SECTION A-A

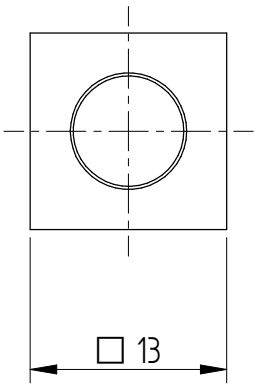

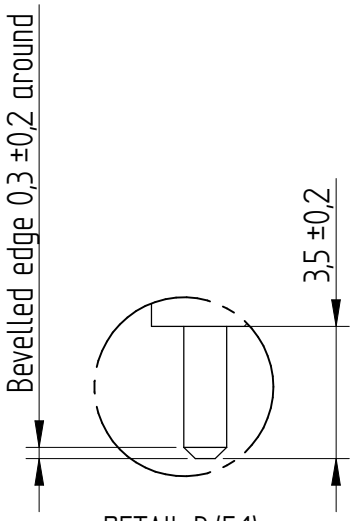

DETAIL B (5:1)

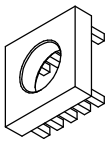

(1:1)

Surface coating 5-10µm Sn on 2-4µm Cu

(PROJECTION)	(TOLERANCES) DIN ISO 2768-m	(SURFACE)	SCALE 2:1
			(MATERIAL) CuZn39Pb3

TOTAL WEIGHT: 3,7 g
WEIGHT Cu: 0,0168 g
WEIGHT Sn: 0,0343 g

	DATE	NAME
DRAWN	2009/09/03	Dino Cantara
VERIFIED	2009/09/03	Heiko Schmid

(TITLE) Ground Element with hole Φ7,3 two Rows Pin-Plate

(DRAWING NUMBER) 7460211

Sheet 1 / 1

ISSUE	CHANGE	DATE	NAME

CONFIDENTIAL !! ALL RIGHTS RESERVED. Passing on or duplication without prior written agreement prohibited.