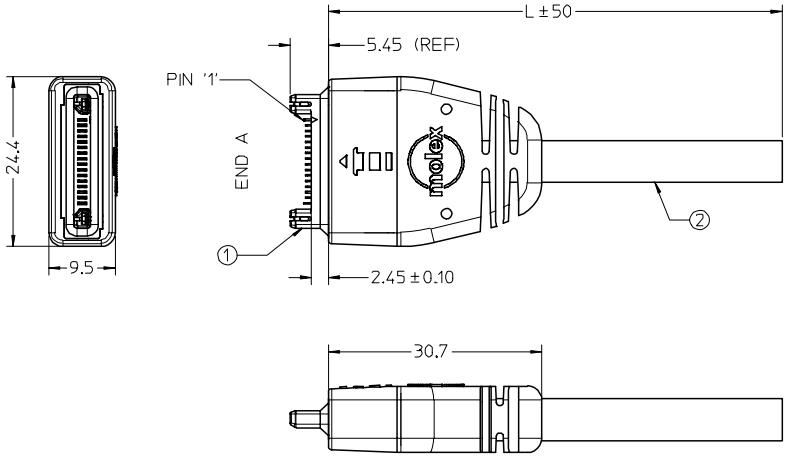

TABLE-1

16	YELLOW/WHITE
15	GREEN/WHITE
14	BROWN/WHITE
13	BLUE/WHITE
12	ORANGE/WHITE
11	RED/WHITE
10	WHITE
9	BLACK/WHITE
8	VOILET
7	BLUE
6	GREEN
5	YELLOW
4	ORANGE
3	RED
2	BROWN
1	BLACK
END A	COLOUR

PART NUMBER	'L' (MM)
36697-0031	1000
36697-0032	2000
36697-0033	3000

ITEM	DESCRIPTION	QTY
2	16 CORE CABLE 7/0.1 STRANDED TINNED COPPER 30 AWG. PVC JACKETED.OD 6MM	SEE CHART
1	HANDYLINK 16 PIN CONNECTOR (453391600)	1

RoHS COMPLIANT

EC NO: I2006-0503
DRWN:SSUDHIR 2006/06/28
CHKD:KPRASAD 2006/06/28
APPR:KPRASAD 2006/06/28
DESCRIPTION
REV 4

QUALITY SYMBOLS
▼=0
▽=0

GENERAL TOLERANCES (UNLESS SPECIFIED)

	mm	INCH
4 PLACES	± ---	± ---
3 PLACES	± ---	± ---
2 PLACES	± ---	± ---
1 PLACE	± ---	± ---
ANGULAR ±---°		

DRAFT WHERE APPLICABLE MUST REMAIN WITHIN DIMENSIONS

DIMENSION STYLE: MM ONLY
SCALE: 2:1
DESIGN UNITS: METRIC
THIRD ANGLE PROJECTION

DRAWN BY: DONNELL DATE: 2005/07/29
CHECKED BY: SSUDHIR DATE: 2005/07/29
APPROVED BY: SSUDHIR DATE: 2005/07/29

TITLE: HANDYLINK STRAIGHT TO PIGTAIL CABLE ASSEMBLY

molex MOLEX INCORPORATED

MATERIAL NO.: SEE CHART
DOCUMENT NO.: SD-36697-004
SHEET NO.: 1 OF 1
SIZE: A2

THIS DRAWING CONTAINS INFORMATION THAT IS PROPRIETARY TO MOLEX INCORPORATED AND SHOULD NOT BE USED WITHOUT WRITTEN PERMISSION

tb_frame_A2_P_AM_T
Rev. D 2004/06/28