MATERIALS AND FINISHES

BODY: ZINC ALLOY
PLATED NICKEL

CENTER CONTACT: PHOSPHOR BRONZE
PLATED GOLD

INSULATOR: PBT

HOUSING: LCP
COLOR NATURAL

SOLDER TAIL: COPPER OVER STEEL WIRE
PLATED TIN

FRONT/REAR CLIP: PHOSPHOR BRONZE
PLATED NICKEL

CHIP CAPACITOR: MULTILAYER CERAMIC

BOARD LOCK CLIP: PHOSPHOR BRONZE
PLATED TIN

PACKAGING: BY TRAY

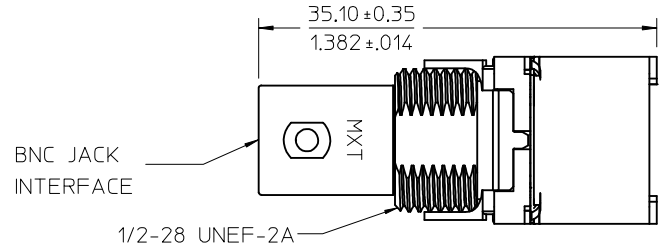

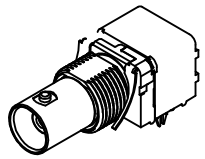

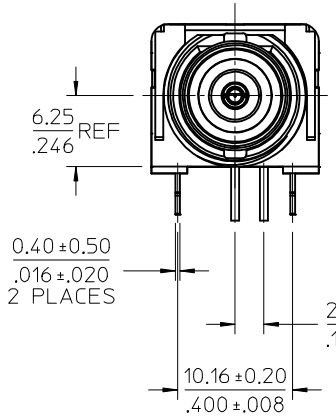

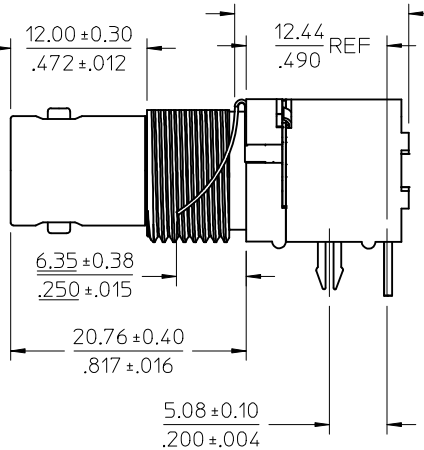

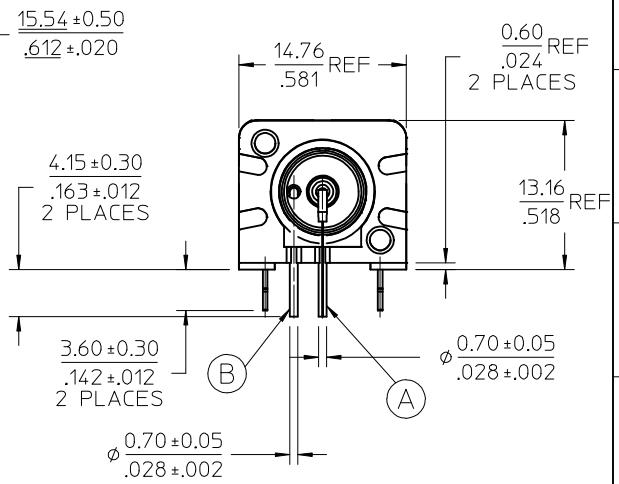

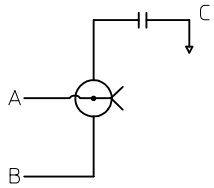

SCHEMATIC
9400 ±20% PF, 1.5 KV W V_{dc}

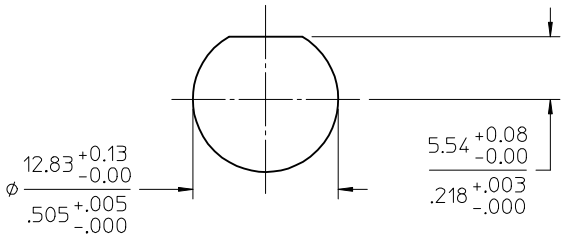

RECOMMENDED MOUNTING HOLE
RECOMMENDED MOUNTING TORQUE:
0.56 N-m(5.00 IN-LBS)
PANEL THICKNESS: 5.5 (.217) MAX

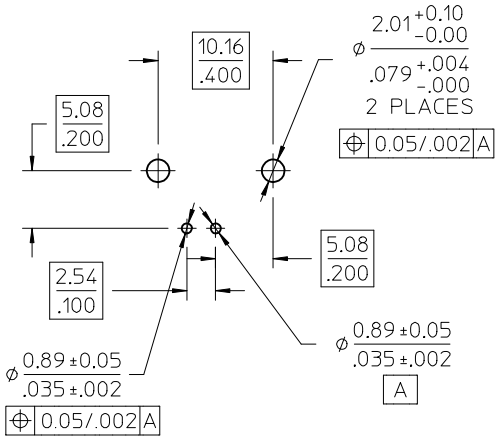

RECOMMENDED PCB LAYOUT

PART # 73100-0166

PS-89675-1030	ELECTRO/MECH PERFORM.
SPECIFICATION	DESCRIPTION

CHG: ADD PACKAGING PER RF15-E224
EC NO: URF2015-0673 2015/05/28
DRWN:EWE102
CHKD:
APPR:YCHENG 2015/06/04
DESCRIPTION
B4
REV

QUALITY SYMBOLS
▼=0
▽C=0

GENERAL TOLERANCES (UNLESS SPECIFIED)

	mm	INCH
4 PLACES	± ---	± ---
3 PLACES	± ---	± ---
2 PLACES	± ---	± ---
1 PLACE	± ---	± ---
ANGULAR ± 2 °		

DRAFT WHERE APPLICABLE MUST REMAIN WITHIN DIMENSIONS

DIMENSION STYLE: MM/IN
SCALE
DESIGN UNITS: METRIC
THIRD ANGLE PROJECTION

DRAWN BY	JWIENER	DATE 2013/05/08
CHECKED BY	SSS	DATE 2013/05/08
APPROVED BY	JWIENER	DATE 2013/05/09
MATERIAL NO.	SEE TABLE	

TITLE
BNC JACK R/A PCB TH
FILTER 50 OHM HIGH TEMP
BNC-J/RA/PCB EWR-1088

MOLEX INCORPORATED

DOCUMENT NO. SD-73100-0166
SHEET NO. 1 OF 1

SIZE C

THIS DRAWING CONTAINS INFORMATION THAT IS PROPRIETARY TO MOLEX INCORPORATED AND SHOULD NOT BE USED WITHOUT WRITTEN PERMISSION